W7FG Vintage Manuals

3300 Wayside Drive
Bartlesville, Oklahoma 74006

Telephone: (918) 333-7893

Manufacturer Collins

Model R-388

DEPARTMENT OF THE ARMY TECHNICAL MANUAL

DEPARTMENT OF THE AIR FORCE TECHNICAL ORDER

TM 11-854

TO 16-35R-388-5

W7FG Manual Service
3300 Wayside Drive
Bartlesville, Ok. 74006

Telephone: 918-333-7893

RADIO RECEIVER

R-388/URR

Radio rec. as
10-23-93 by John (Mac?)
336-4113
Whippoorwill Snr Citizens
S. Hulah Lake Rd. 3581

WA5QAS - CARROLL Weaver
BOX 209
GRAINOLA, OK 74652

DEPARTMENTS OF THE ARMY AND THE AIR FORCE

APRIL 1952

AGO 3261A—Apr

I have an R-390, an R-390A, a 75S-3A, and a 51J-4 in a rack here in the shack. The 51J-4 has been modified in one way, I used a Jackson Brothers Ball Drive mounted on a round plate that is about 1/8" thick supported off the front panel of the radio by a couple of 1/4" standoffs. I use the screw holes that Collins put in the front of the panel for a shaft support bearing block to hold this in place....BTW, there was a shaft extension that threaded into the PTO shaft on my radio that I removed to make the drive, etc., fit closer to the panel. I then took a knob set from an old Siltronics CB VFO that I got a guy at a hamfest to give to me (I only wanted the back metal knob, kinda like the Swans metal knob but larger) and the original J-4 tuning knob and assembled these on the ball drive....I did have to take a spare main knob and turn down the edge about 1/8 to 1/4" to give a nicely stepped appearance to the setup...this is now the smoothest tuning receiver I have!

I had been using a 4 to 1 75A-4 drive and knob for a couple of years on this radio and just wanted to try something different. The ball drive is about a 6 to 1 reduction and makes tuning in SSB or CW a breeze, even compared to the Collins parts! In fact, I think I'll keep my eyes open for more of these large back knobs for these Sillytronics VFO's to replace the 4-1 units on my 75A-4's and KWS-1. These drives are (heresy, I know!! too bad!) IMHO, smoother and better than the Collins parts! The 3 Collins assemblies I have are a bit "wigglier" than these guys are...there is no slop or flop on the J-4 and the "feel" is much, much better. Best of all, the process is entirely reversible with no ill effects!

As Tom said, I prefer the J-4 for cruising the bands and it's filter widths are just about right for SWL'ing and AM useage...the R-390/URR has a bit better fidelity, though, and it is one of the best sounding rcvrs I have for SWL'ing. The 390A, though, does have beter ultimate rejection in the 4kc position, which is the one I use the most on both 390's, and the J-4's 3kc position is real "tight" but good when the going gets tough.

I do have an R-388 out in the garage with a dead PTO in it and I think it's a bit more sensitive than the J-4, just because of the loss in the mechanical filters of the J-4....the 388 is a great receiver in it's own right and with it's crystal filter you can get rid of a lot of interference, so, if you have a choice, it's a tough one to make!

Rick Blank, KI5SL rblank@txdirect.net
2223 Blanco Road KI5SL@K3WGF.STX.USA.NOAM
San Antonio, Texas 78212 AMSAT NA#26195

Date: Wed, 30 Oct 1996 14:10:38 -0500
From: Glenn Finerman <GFINER@nms.com>
To: boatanchors@theporch.com
Subject: 51S-1 6kc filter Mod
Message-ID: <s27761f2.034@nms.com>

I took a chance and ordered a 500kc, 6kc bandwidth Mechanical filter from Fair Radio. It's comes on a Collins 618T module and cost $40.00. It's the same one described in the latest ER as a mod for the 51J-4. I plan on installing it in my 51S-1 in place of the 5kc transformer arrangement. Has anyone performed this mod

using the surplus filter from Fair? How about the Collins factory mod to add the 6kc filter? Anybody have the doc's on this?

Thanks.....Glenn N2BJG gfiner@nms.com

Date: Thu, 12 Sep 1996 00:19:18 +0000
From: "Rick Blank" <rblank@legend.txdirect.net>
To: boatanchors@theporch.com
Subject: 75A-3 PTO bearing brackets and reduction drives
Message-ID: <199609120016.TAA27134@legend.txdirect.net>

> Help!...On a 75A-3, can anyone tell me if the main tuning knob and the
> bracket behind the knob that guides the tuning shaft through the front
> panel are the same for 51J-3/51J-4 as for the 75A-3?
> Since this bracket/plate is missing from my 75A-3, I'm not sure if it's just a
> plate with holes or if it has some sort of bearings for the tuning shaft.
> If it's the same, Fair may have some parts from the 51J leftover.
> I think the shaft is also bent - needs replacing..
>
> Thanks Firebottle burners....
>
> 73.....Glenn.....N2BJG gfiner@nms.com
>
>

I'm pretty sure that the two parts are the same or at least interchangeable....but I did something totally different....I did this a couple of years ago to a couple of Collins rigs around here:

What I have done on my 51J-4 and one of my A-3's is to cut an 1/8" thick phenolic or plastic ring large enough to mount on 1/4" standoff spacers which screws go thru holding the ring to the original bearing bracket mounting holes in the face of the radio.

I use this as a mount for a Jackson Brothers ball drive.....on the "high speed" section of the ball drive I use the back knob from the old CB Siltronics type VFO's (these are much like the Swan 350, 500, 750 series aluminum knobs and are the same as the 600-R & -T models and are about 3" in diameter). On the 1/4" shaft I use an original knob that I have turned about 1/16" off the flange to make it match the "step down" of the aluminum knob.

This gives a great 2-speed drive ability to these old rigs, fits in nicely size-wise (when done properly it looks like it belongs) and is, in my opinion, much, much better than the 75A-4's vernier drive assembly....yep, I just twisted the A-4's and the J-4's and I much prefer the feel of the J-4's setup....plus, the reduction rate is greater for easier CW and SSB tuning, yet, with the high-speed ability, you can get from one end of the band segment to the other without a lot of knob cranking, in fact, the knob I use on the J-4 doesn't have a crank on it at all...You can usually buy most all the parts necessary when you buy one of the CB VFO's for about 10 to 20 percent of what a Collins reduction knob assembly goes for today....keep an eye out for these junky old VFO's and their knobs at swapfests.

This modification is totally reversible with no after effects on the radios (on the J-4 I did have to unscrew a little shaft extension that fits on the PTO input shaft to lengthen it a bit, but on the A-3

I just used spacers that were long enough to give the right clearance for the ball drive to fit.

Hopefully this will get thru, I have had a myriad of mailer problems lately and have lost many e-mail pieces to some kind of gremlin that has popped up here in this computer..

CUL and good luck.

Rick Blank, KI5SL rblank@txdirect.net
2223 Blanco Road KI5SL@K3WGF.STX.USA.NOAM
San Antonio, Texas 78212 AMSAT NA#26195

Be it known that General Electric made an 'adapter' that WAS a synchronous detector. In fact it is an ISB detector! You can rig it with a "stereo" amplifier and stereo headphones and hear both sidebands at one time. This might not sound too exotic, but some SWBC "SSB feeder" stations sometimes transmit (or did) two programs at the same time, one on lower and the other on upper sideband. Many years ago I had one. It is the GE model YRS-1. It is a tube "boat anchor" and seems like it was rigged for a 455 khz. I.F. input.

When you have it rigged for "stereo" (a modification, by the way) and tune your receiver, you have an audible "sense" to tuning. Heterodynes seem to originate in one ear, go thru your head to the other ear! It's very wierd. You can immediately tell which side QRM is on! Sort of an "Auditory" panoramic adapter! I sold mine after I got a Central Electronics model "B" sideband slicer that I used with my R-388/URR. (They retune fine to 500 khz by the way!)

Either of these devices will add very good SSB operation to the Collins 51J-3/4 series, and I would assume it would work well with the R-390 too. No need to extensively modify the receiver either! The "big" change with the 51J series is, you have to take low level audio from the receiver into the "slicer" and back into the receiver again. I used two BNC connectors. Two RCA or whatever type jacks turn you on will work OK. The model "B" manual specifies where to tap, into the receiver, don't remember if the YRS-1 book did, its been too many years ago!

73,

Sandy W5TVW

Date: Wed, 12 Jun 1996 15:59:16 CDT
From: "Terry O'Laughlin, RM:7135, #:6-6667" <OLAUGHLIN@vilas.uwex.edu>
To: boatanchors@theporch.com
Subject: BA SWL rigs
Message-ID: <MAILQUEUE-101.960612155916.288@vilas.uwex.edu>

My favorite SWL rig is my Eddystone S-680X. No tuning dial on any American radio comes close to that Eddystone feel, completely smooth with absolutely no slop or backlash. Add in the huge linear dial, the crystal filter, clear and sweet audio, the lighthouse logo... An

uncommonly good radio.

If I had to choose an American radio, it would be the 51J-3 (R-388). The 1kHz dial resolution, no nonsense styling, decent audio, and excellent craftsmanship.

The SX-62 is better looking, but the performance? arf! The SP-600 is also better looking, though the front panel is a trifle overblown (a whole second window just for a logging scale?). I've never had one that didn't drift and those d*** caps will drive you nuts (you'll also pop a nut trying to move the thing around). The SX-73 and SX-88? Try and find one at a reasonable price. The R-390/390A? You've got to be into S&M or have forearms like Popeye.

73 Terry O' WB9GVB

Date: Sun, 30 Jun 1996 00:19:13 -0500
From: rh8421@gate.net (Ron Hankins)
To: boatanchors@theporch.com
Subject: Collins 500Khz mechanical filters
Message-ID: <v02130503adfbbe0c8ffb@[199.227.3.152]>

I still have a few of the 500KHz Collins mechanical filters used in the two filter modifications described in the March and June 96 issues of Electric Radio. The filter modification can be installed in the 51J-1, 51J-2, 51J-3, R388, and 75A-1. They are 3.5KHz wide, centered at 501.5KHz. I am asking $50.00ea plus $3.00 for priority mail.

Ron Hankins
rh8421@gate.net

Date: Sun, 07 Jul 1996 13:06:24 PDT
From: Terry Burge <terrybu@netman.ENS.TEK.COM>
To: boatanchors@theporch.COM
Cc: terrybu@netman.ENS.TEK.COM
Subject: 51J-3/R-388 VFO/PTO
Message-ID: <9607072006.AA01030@netman.ENS.TEK.COM>

Gang,
Thanks to Tom, N5OFF, I loosened the spacers and managed to get the VFO out. Couldn't get the spacers completely off due to the length of the inset screws but by losening them it gave enough flexibility to take out the unit. I also took loose the power resistor R-181 (I think it was) and the cap which I can't see how anyone could do this without removing these.
I found the coax was broken and also changed out the 0.01uF (3) caps just in case. One was a short anyway. Really had to take a tripple take to make sure what these were. They look like extra long resistors with color bands 1,0,3,9,1,2 on them. It's always fun to run across things like this isn't it...I think I'm right, I think they are caps, I think I'm right, recheck the schematic, hope it is right,...fun fun fun.
I'm going to leave off the bottom cover off the tubes so I can get at the parts. Is the can over the VFO a must? This thing is oily as could be be. Never seen a tuning arrangement like this with slug tuned inductor but it makes sense. Hope I get it back together...see if I fixed anything!
Terry

KI7M

A "note" on one item:

The antenna coils on the R-388 were arranged for a high impedance antenna. Many were used in the AN/GRC-26 Radio Hut. One end had 10-12 foot whips for two R-388 receivers, the other end had a "tank" whip for the transmitter (usually a BC-610).
Most of the used ones I have come across all have the same problem:
Slug wires for antenna coils bent/broken, and slugs jammimg in the antenna coils.
This was caused by high RF voltages heating and swelling the coil forms! If you repair or get new slugs, be sure to make sure that they go in and out of the coils
without binding at all! I have found the "swelling" can be remedied by taking out
the antenna slug rack (easily done once the springs are removed.) and gently 'filing' the inside of the coil forms with a fine chainsaw file. Use a NEW SHARP
one! If you shop around, you will be able to find a file slightly smaller than the inside of the form. Be very careful and take just a little of the 'cooked' phenolic off at a time as
the forms will break if you get too overzealous! After you are done, the problem should
not recur. Check the neon lamp mounted in the rear of the chassis too. They are frequently broken or bad. If you MUST use a seperate receiving antenna and you run high power, use a pair of back to back rectifier diodes across the antenna terminals
and a 15-40 watt lamp in series with the "hot" antenna lead. This will keep the same thing from happening again.
73,
Sandy W5TVW
~~~~~~~~~~~~~~~~~~~~~~~~~~~~~~~~~~~~
Boat Anchors collected, restored. modified and used!

Date: Thu, 13 Jun 1996 16:50:27 -0800
From: Herb Holeman <choleman@ptialaska.net>
To: boatanchors@theporch.com
Subject: Favorite SWL receiver
Message-ID: <199606140050.QAA19496@ptialaska.net>

I've enjoyed the thread on favorite SWL receivers, and feel inspired to add my $0.02.

Favorite SWL receiver implies general coverage rather than amateur band only. With that in mind, and after some reflection, I'd have to choose the R-388/51J- series of Collins BA's. The main tuning dial of the R-388 is noticeably smoother than even a well-adjusted R-390 or R-390A with fresh lubrication on its gears, and even the band change knob requires less wrist power on a 388. I find the stability, dial calibration, and the constant tuning rate--usually one megacycle per band--of the Collins designs to be superior to any other line of receiver I've tried, being mindful that my experience is not as extensive as some folks on the list. When cruising the
~~~~~~~~~~~~~~~~~~~~~~~~~~~~~~~~~~~~

shortwave bands I find it convenient to tune up one band and down the next, thereby conserving wrist energy.

The R-388 is a bit deficient on bandwidth selections compared to the R-390 series, but the R-388A model overcomes this to some extent -- but unfortunately the one I own is not an "A" model. For AM Medium Wave and Short Wave broadcast listening, the gentle slopes of the nominal 6 KC bandwidth of the R-388 are very effective, reasonably hi-fi, and not at all fatiguing to my old ear.

I've done what I consider to be a useful mod to my 388--I obtained a 3 KC bandwidth Collins mechanical filter (expensive!!) and changed the rotary switch in the crystal filter compartment to a double pole model. Now when I select selectivity position one, it cuts in the mechanical filter instead of the crystal filter. I understand the "A" model does a similar trick. Since the R-388 has a 500 KC IF, the available selection of mechanical filters is limited. The availble choices for voice bandwidths are 1.8 and 3.0 KC so I chose the 3.0 KC filter as a good compromise for SSB listening. My next mod will be to add a product detector using a 6GX6 valve as I did many years ago on a 75S-1 with great results. An even better approach might be to take the cathode follower IF output and connect it to an outboard synchronous detector which should work well for both AM and SSB reception. A QST article about two years ago showed an interesting design for a sand-state synchronous detector, but of course a hollow state version could also be concocted, and would polish one's skills in phase locked loop design. Ah, so many projects, so little time!

de Herb Holeman, WL7BIL
Juneau, Alaska
choleman@ptialaska.net

** Still looking for a copy of "Electronic Measurements" by Terman and Petit.

Date: Sat, 06 Jul 96 20:35:02 UTC
From: n5off@w5ddl.aara.org
To: boatanchors@theporch.com
Subject: R-388 PTO removal
Message-ID: <410837@w5ddl.aara.org>

Just apply more force.

Just kidding . . . the trick is to remove the spacers which space the thing out from the panel. With two of the spacers off, the thing should tilt nicely. The dial connector thingy will plop out at that time. When you put it back on, use a little dab of grease to stick it on while you are lining it up.

I have successfully done this project a few times, but its not fun. I gave the PTO about 1 kc of lead (1001 kc output in ten turns) so it would drift through 1000 over the years, and prolong the time until I have to do it again.

The 390/390A is much easier to adjust.

73 bonne chance

Tom

Still Wanting: BC-348 New Condition
Keeper of Collins receiver contract data for BA.
Reply to: n5off%w5ddl.aara.org@usl.edu
Phone 318-989-3430

Date: Sun, 07 Jul 96 23:36:51 UTC
From: n5off@w5ddl.aara.org
To: boatanchors@theporch.com
Subject: R-388 PTO Cover
Message-ID: <411651@w5ddl.aara.org>

It may be an understatement to mention that it is a good idea to keep the cover on the PTO. If the unit was baked dry, the seals should keep the PTO stable, not to mention dust free and clean. This is a very important part. I wouldn't consider running it sans cover.

Did you notice if the endpoint needed adjustment before you took it out? If it needs adjustment, I'd advise doing it while out of the mount.

Here is my canned discussion on general PTO endpoint adjustment.

cut here==========

I simply use the disk on the Oldham coupler as a guide, and make pencil marks on the disk and frame to turn the shaft exactly 10 turns, no paper templates or anything like that. Here is the procedure w/o the compensating stack adjustments.

1) Hook up freq counter to PTO output.
2) Make note of output in kcs for a 10 turn input,
   (ex 991 kcs for exactly 10 turns).
3) turn the adjusting screw 1/2 turn or so and
   make note of the amount and direction.
4) erase old pencil marks and make new ones
   (what was a convenient mark will now move to a new spot).
5) GOTO 2 until output is exactly 1000 kcs for exactly
   10 turns from the spec. start and stop outputs.
   For example, the R390 PTO will output from 3455 kcs
   to 2455 kcs in exactly 10 clockwise turns.

See your manual for other frequency limits for other PTO's.

73 de tom

Date: Wed, 16 Oct 1996 21:24:39 -0700
From: n6nae@ix.netcom.com (Richard Humphrey)
To: boatanchors@theporch.com

Subject: RE: R388 pwr supply/was: unusual contract
Message-ID: <199610170424.VAA07236@dfw-ix2.ix.netcom.com>

Dennis wrote:
>Also, part of this circuit involves a delay that prevents B+
>from being applied until after about 20-25 seconds. So,
>even if you turn the unit all the way on (passing the
>stand by setting), B+ won't be applied until about 20-25
>seconds have passed.

Ummm, some fuzzy thinking there.

In the R-388, the STANDBY position only removes B+ from the 3rd IF tube. It has no other function, and 95% of the receiver doesn't know if it's in STBY or ON.

A delay circuit in the B+ is pointless. The supply uses a 5V4 rectifier which is a heater/cathode type with the usual 11 second warmup. There is no B+ at switch-on. The B+ ramps up slowly, and doesn't start until the rest of the tubes are starting to conduct. I checked it out on mine with a voltmeter and a watch. No voltage until about 8 seconds into warmup, and then the B+ only went up to it's normal voltage, not a lot higher, telling me that the rest of the radio was conducting and putting close to the normal load on the supply. If the point of delaying B+ is to avoid cathode stripping and grid emission due to a cold cathode, the 5V4 rectifier already takes care of that. (Do those problems even happen in receiving tubes or with B+ under 1KV?)

Why did that last contract put these mods in? Who knows, but I don't think it makes much sense. Remember, if everything in the mil-hdbk was true, pigs could fly.

Warm it up in Standby if you want, it won't hurt anything, but I think it accomplishes zilch.

Now, if there was a mod to keep these sets from frying the power tranny, that would be different! My parts junker came with a replacement already in it, and the one in the set I fixed was burnt out. Are these things a little unreliable?
Richard
n6nae@ix.netcom.com

Date: Mon, 28 Oct 1996 08:18:04 -0700
From: pmills@A.crl.com (Phil Mills)
To: boatanchors@theporch.com
Subject: R-388 saga again
Message-ID: <199610281518.AA20921@A.crl.com>

Got the R388 panel back on yesterday....cleaned up the knobs, etc. It looked great. Then I got a e-mail note from a kindly BA'er inquiring about the PTO and end-to-end spread as the R388's were going bad in this area. So, I decided to check. It was over 6 kc off end-to-end! What to do?....well, I'd been successful at adjusting the PTO on my 75A4 so this one couldn't be all that bad. So, I dived in. Removed V001 from its socket in the PTO to give a little physical room, then, using a small 3/8 box wrench, removed the plug covering the adjustment.

This required a little deft manuvering but was not too bad. Then, I placed a small mirror in the space between the empty tube socket and the panel supporting the PTO at the front. Now, I could see the adjustment which appeared to be a small threaded brass shaft with a screwdriver slot in it. To condense the story a little here, I spent about 3 hours manufacturing tools and working to turn this little beast. It apparently had a drop of goo to keep it from turning. I finally cut the end off of an otherwise perfectly good screwdriver, soldered a nut on to it, and used this as a tool to free the shaft.... once the seal or whatever was broken it turned easily. The final adjustment tools were screwdrivers made from two small allen wrenches. In the end, I got it adjusted to an end-to-end misalignement of only about .2 kc. with some 100 kc mid points being off as much as .3 or .4 kc.

Would someone who has a set of back issues of ER be so kind to advise me as to what issue #'s have articles on the R-388?

thanks & 73,
Phil

Phil Mills, AB5TH
pmills@a.crl.com
713-992-5762
Friendswood, TX (south of Houston)

**** Wanted -- 1957 ARRL Handbook *****

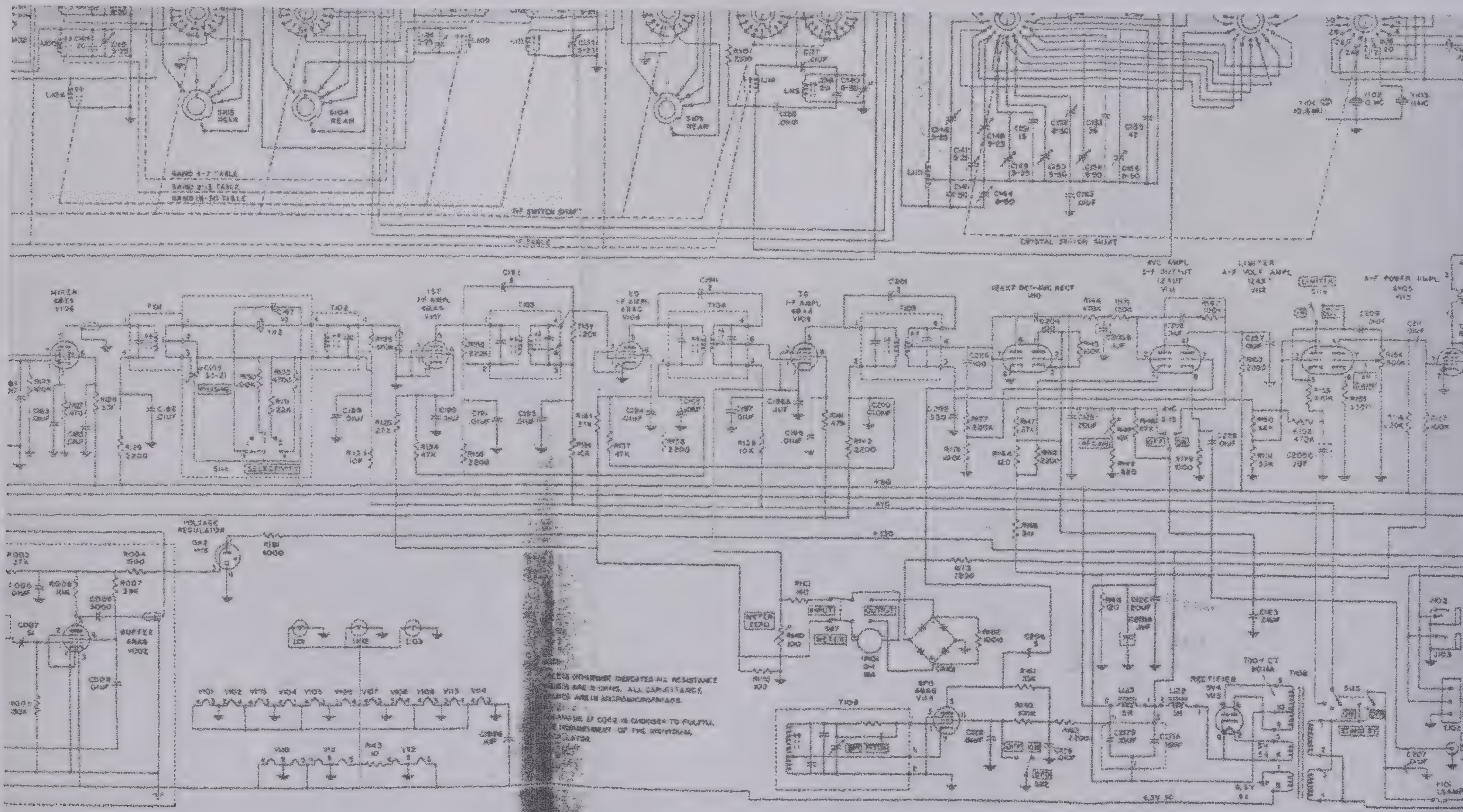

Figure 42. Radio Receiver R-388/URR, over-all schematic.

W7FG Vintage Manuals
3300 Wayside Drive
Bartlesville, Oklahoma 74006

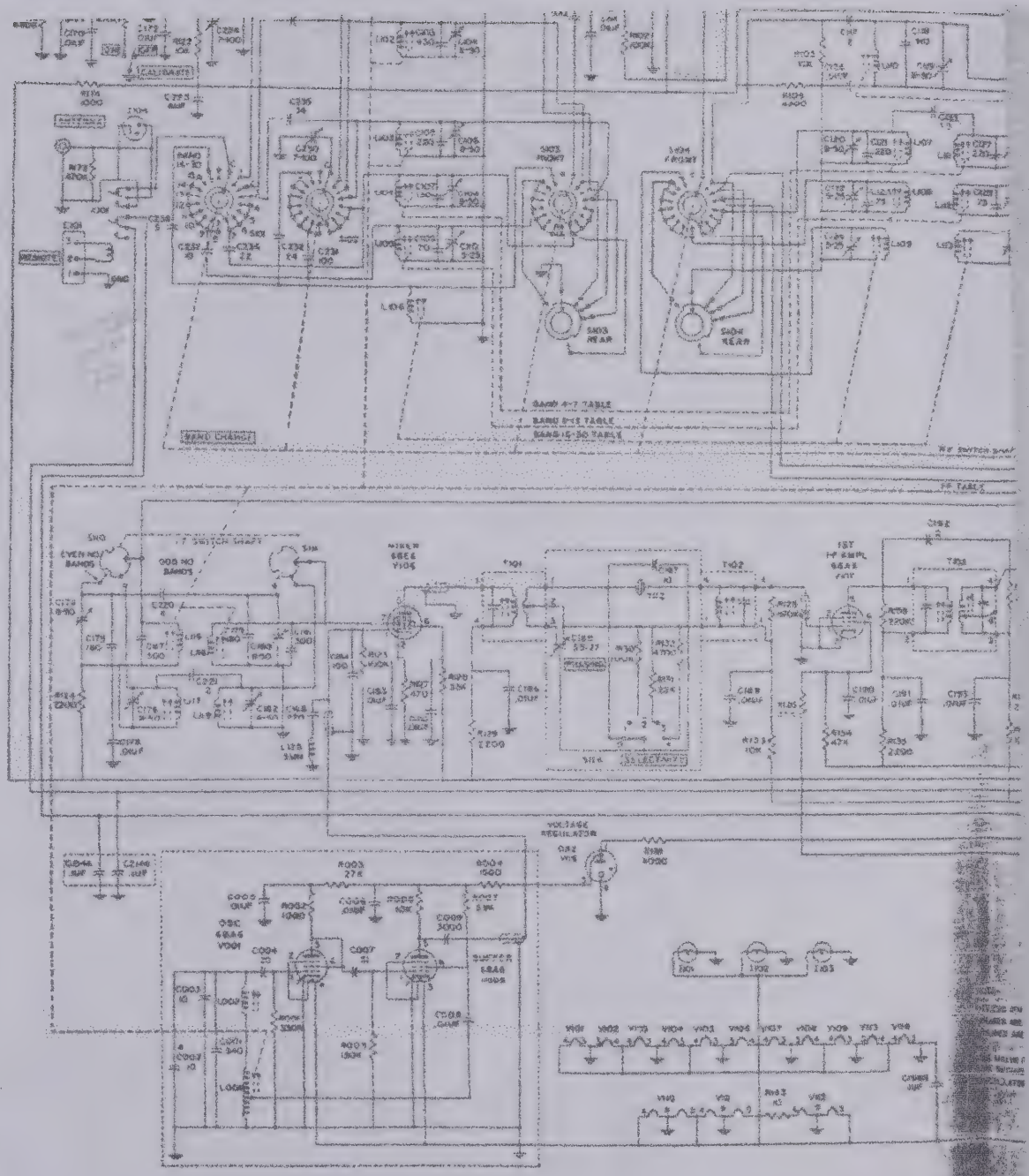

Figure 42. Ro

W7FG V
3300 W
Bartlesvil

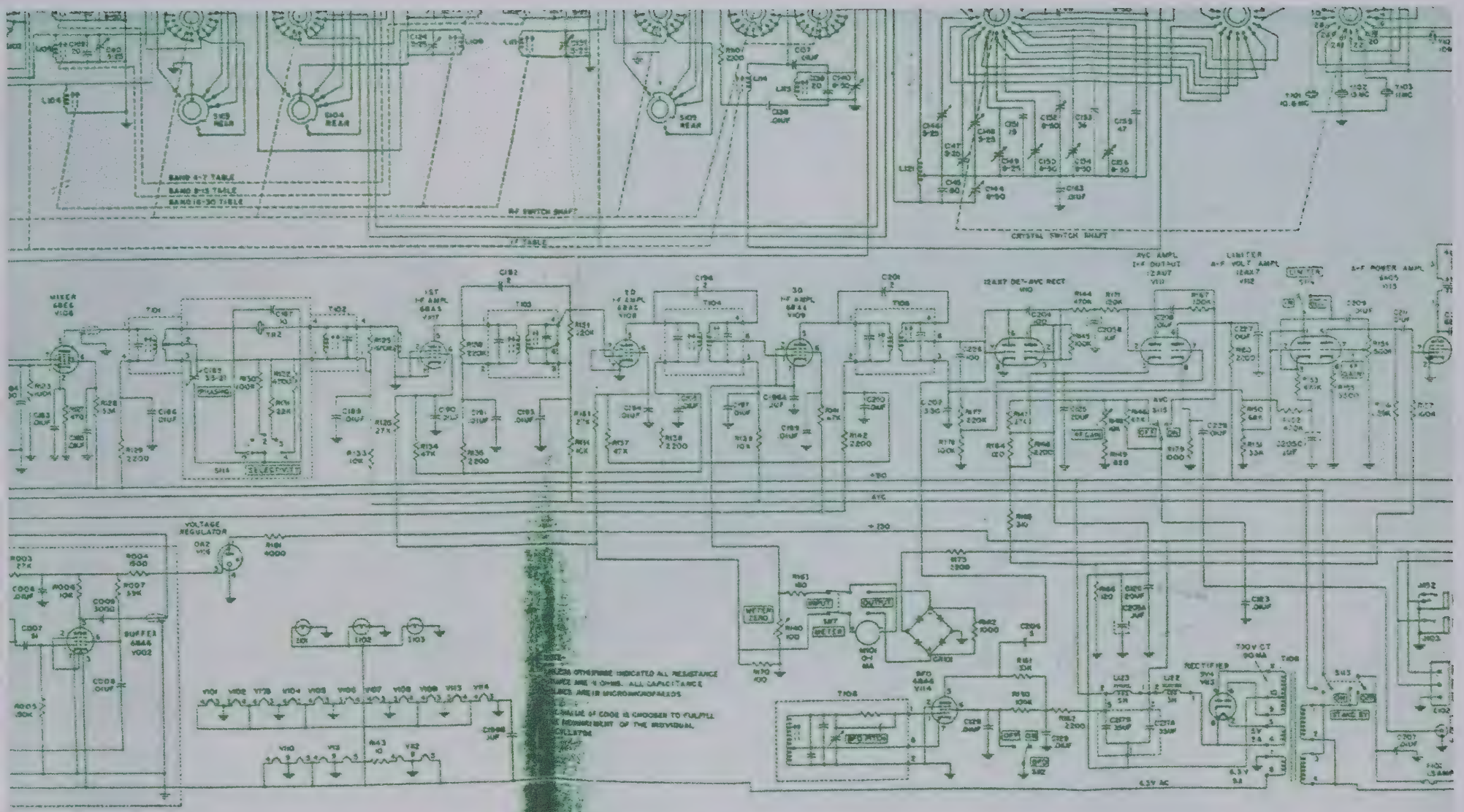

Figure 42. Radio receiver R-388/URR, over-all schematic.

W7FG Vintage Manuals
3300 Wayside Drive
Bartlesville, Oklahoma 74006

Telephone: [illegible]

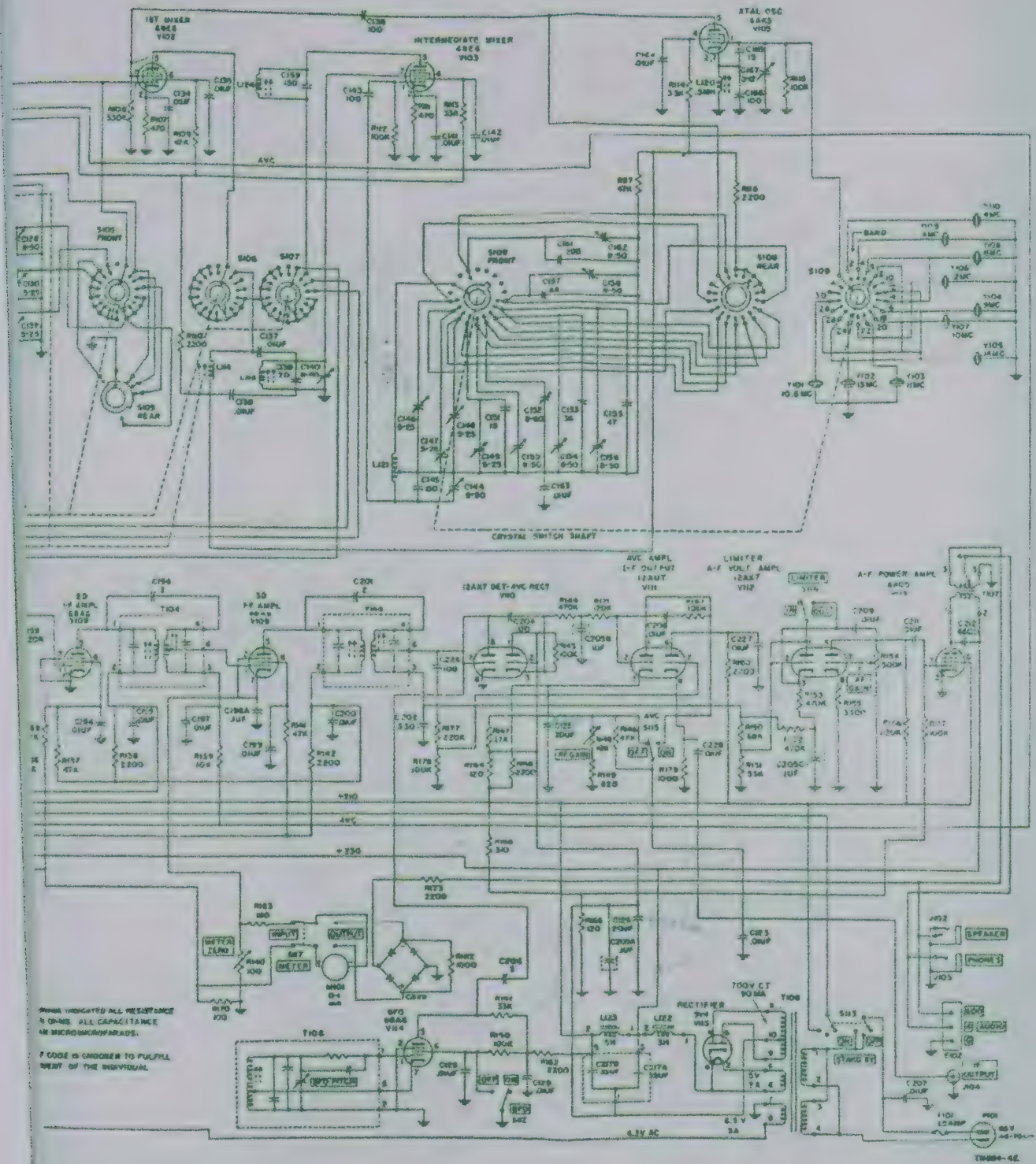

r R-388/URR, over-all schematic.

ntage Manuals
yside Drive
le, Oklahoma 74006

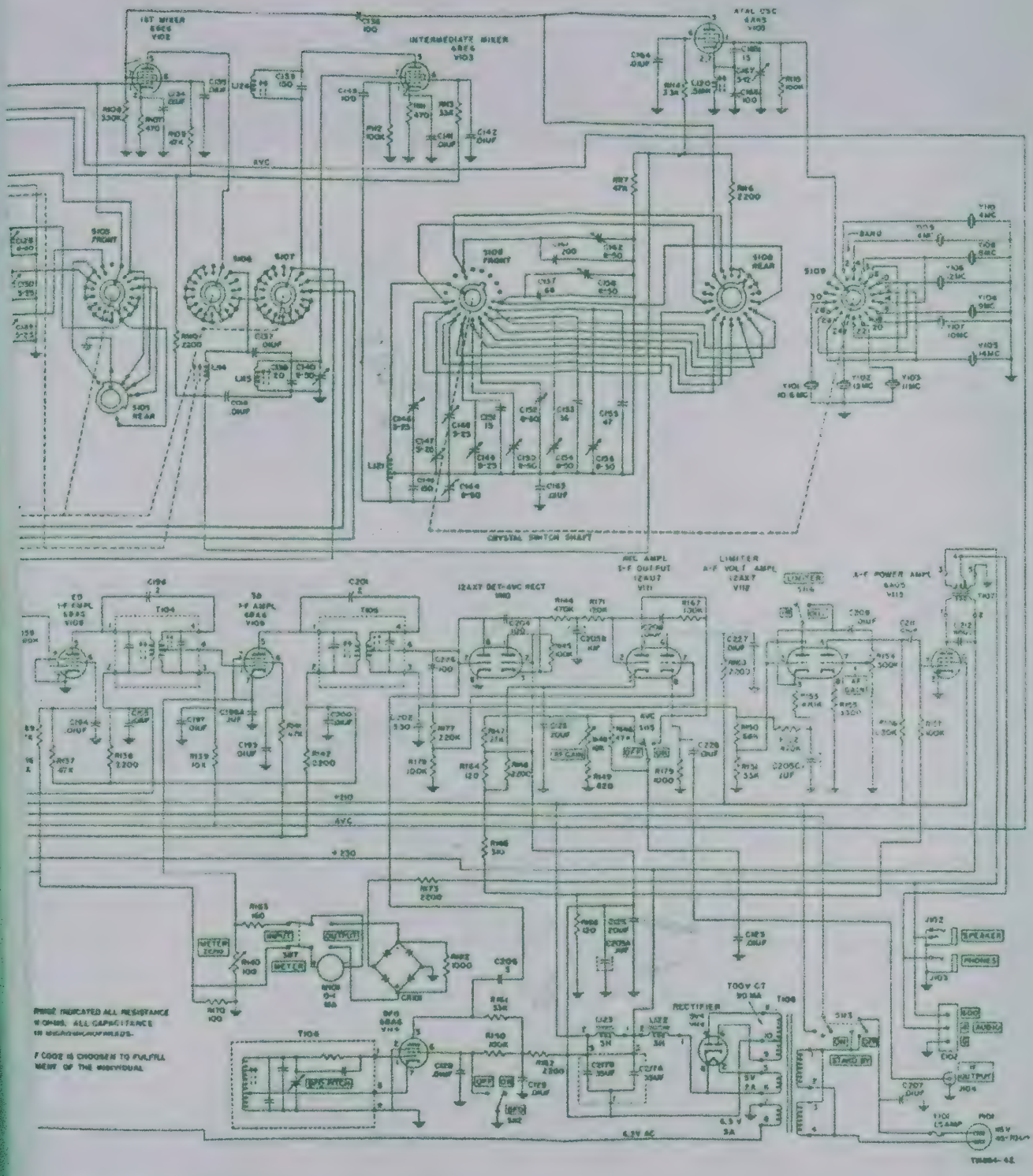

r R-388/URR, over-all schematic.

Itage Manuals
yside Drive
le, Oklahoma 74006

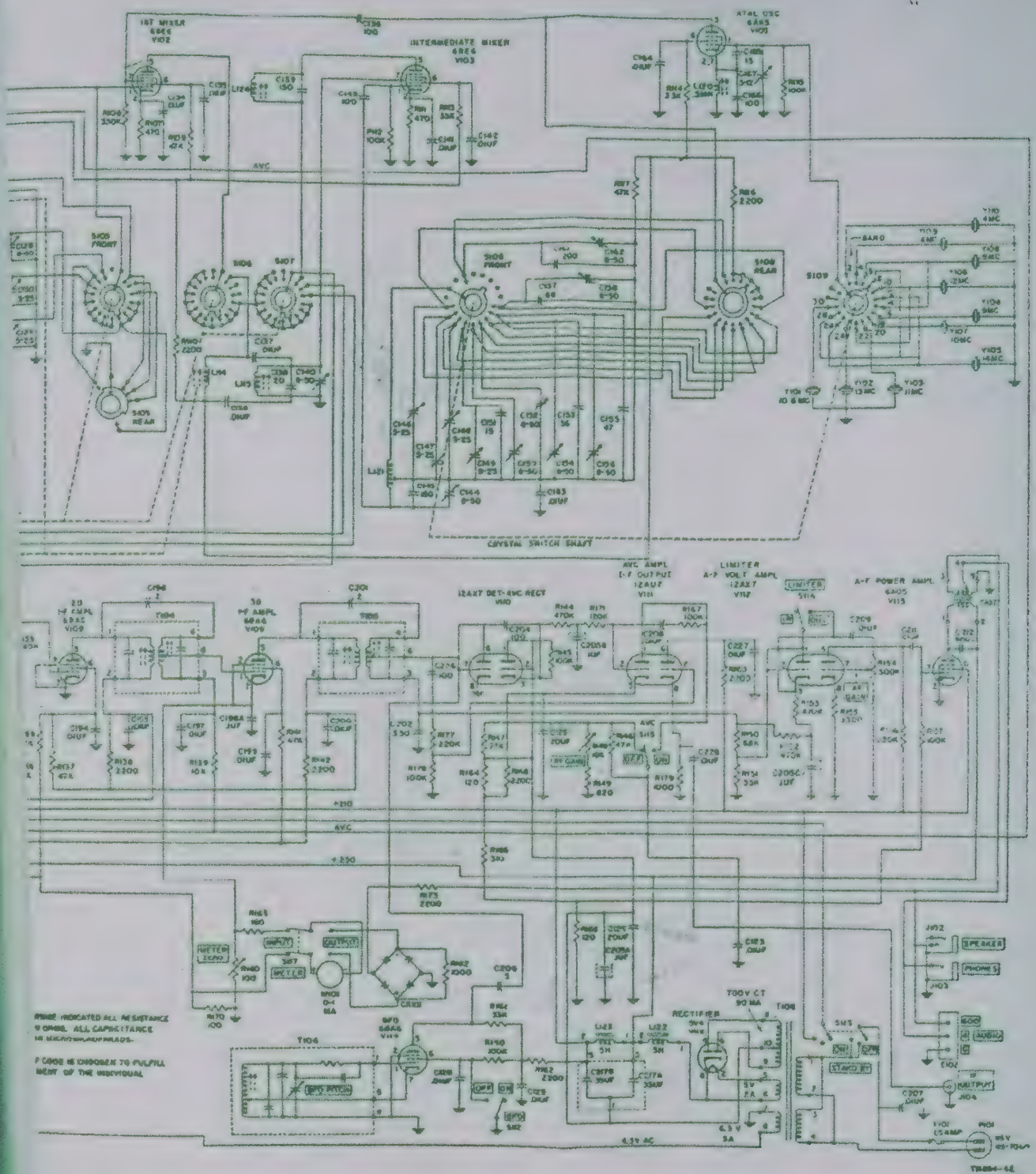

r R-388/URR, over-all schematic.

Manuals
Drive
Oklahoma 74006

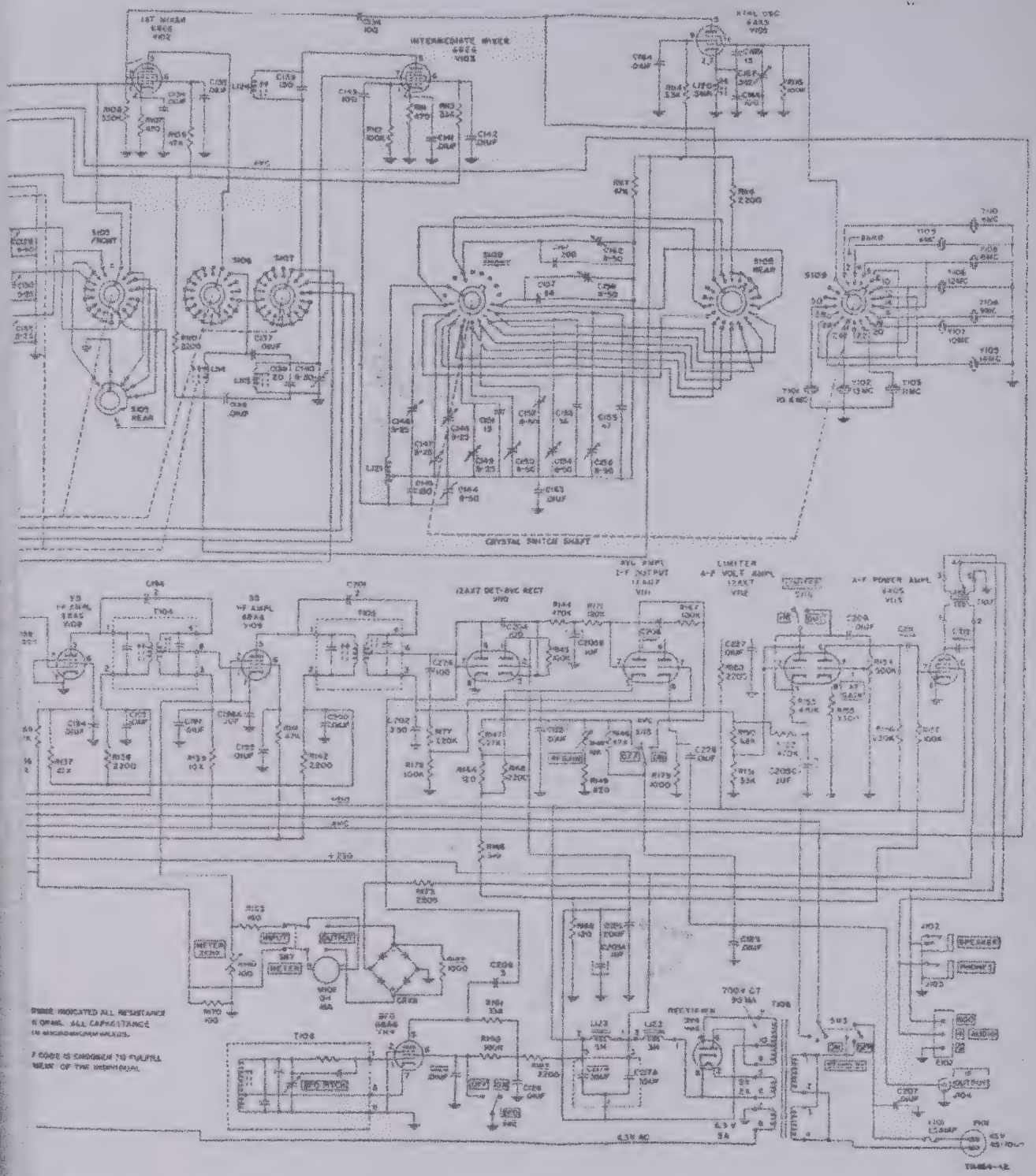

r R-388/URR, over-all schematic.

ttage Manuals
yside Drive
le, Oklahoma 74008
918) 371-2731

DEPARTMENTS OF THE ARMY AND
THE AIR FORCE

WASHINGTON 25, D. C., *23 April 1952*

TM 11–854/TO 16–35R–388–5 is published for the information and guidance of all concerned.

[AG 413.44 (29 Feb 52)]

BY ORDER OF THE SECRETARIES OF THE ARMY AND THE AIR FORCE:

OFFICIAL:
WM. E. BERGIN
Major General, USA
The Adjutant General

J. LAWTON COLLINS
Chief of Staff, United States Army

OFFICIAL:
K. E. THIEBAUD
Colonel, USAF
Air Adjutant General

HOYT S. VANDENBERG
Chief of Staff, United States Air Force

DISTRIBUTION:

Active Army:

Tech Svc (1); Tech Svc Bd (1); AFF Bd (ea Svc Test Sec) (1); AFF (5); AA Comd (2); OS Maj Comd (5); Base Comd (5); Log Comd (5); A (20); MDW (5); CHQ (2); FT (2); Sch (5) except 11 (25); Gen Dep (2); Dep 11 (20) except Sig Sec, Gen Dep (10); Tng Div (2); POE (10), OSD (2); Lab 11 (5); Mil Dist (3); 4th & 5th Ech Maint Shops 11 (3); Two (2) copies to each of the following T/O&E's: 11–107; 11–127; 11–500, CA, CB, CC, CD, EA–ET; 11–587; 11–592; 11–597.

NG: Same as Active Army.

ORC: Same as Active Army.

For explanation of distribution formula, see SR 310–90–1.

1318 E. 60th St Apt 2E
Tulsa, OK 74105
Brigham Apts

W7FG Vintage Manuals
3300 Wayside Drive
Bartlesville, Oklahoma 74006

Telephone: (918) 333-7893

RADIO RECEIVER

R-388/URR

United States Government Printing Office
Washington: 1952

AGO 3261A

WARNING

HIGH VOLTAGE

is used in the operation of
this equipment.

DEATH ON CONTACT

may result if operating personnel
fail to observe safety precautions.

CONTENTS

		Paragraphs	Page
CHAPTER 1.	**INTRODUCTION**		
Section I.	General	1, 2	1
II.	Description and data	3–8	1
CHAPTER 2.	**OPERATING INSTRUCTIONS**		
Section I.	Service upon receipt of Radio Receiver R–388/URR	9–13	7
II.	Controls and operation under usual conditions	14–20	12
III.	Operation under unusual conditions	21–24	16
CHAPTER 3.	**ORGANIZATIONAL MAINTENANCE INSTRUCTIONS**		
Section I.	Organizational tools and equipment	25–26	17
II.	Preventive maintenance services	27–29	17
III.	Lubrication and weatherproofing	30–32	19
IV.	Trouble shooting at organizational maintenance level	33–36	19
CHAPTER 4.	**THEORY OF OPERATION**		
Section I.	Electrical theory of receiver	37–55	23
II.	Mechanical functioning of receiver	56–59	49
CHAPTER 5.	**FIELD MAINTENANCE INSTRUCTIONS**		
Section I.	Trouble shooting at field maintenance level	60–73	53
II.	Repair	74–79	67
III.	Alinement procedures	80–94	71
IV.	Final testing	95–102	74
CHAPTER 6.	**SHIPMENT AND LIMITED STORAGE AND DEMOLITION TO PREVENT ENEMY USE**		
Section I.	Shipment and limited storage	103, 104	76
II.	Demolition of matériel to prevent enemy use	105, 106	76
APPENDIX I.	**REFERENCES**	------	77
II.	**IDENTIFICATION TABLE OF PARTS**	------	80
INDEX		------	98

RESCUE.

In case of electric shock, shut off the high voltage at once and ground the circuits. If the high voltage cannot be turned off without delay, free the victim from contact with the live conductor as promptly as possible. Avoid direct contact with either the live conductor or the victim's body. Use a dry board, dry clothing, or other nonconductor to free the victim. An ax may be used to cut the high-voltage wire. Use extreme caution to avoid the resulting electric flash.

SYMPTOMS.

a. Breathing stops abruptly in electric shock if the current passes through the breathing center at the base of the brain. If the shock has not been too severe, the breath center recovers after a while and normal breathing is resumed, provided that a sufficient supply of air has been furnished meanwhile by artificial respiration.

b. The victim is usually very white or blue. The pulse is very weak or entirely absent and unconsciousness is complete. Burns are usually present. The victim's body may become rigid or stiff in a very few minutes. This condition is due to the action of electricity and is not to be considered rigor mortis. Artificial respiration must still be given, as several such cases are reported to have recovered. The ordinary and general tests for death should never be accepted.

TREATMENT.

a. Start artificial respiration immediately. At the same time send for a medical officer, if assistance is available. Do not leave the victim unattended. Perform artificial respiration at the scene of the accident, unless the victim's or operator's life is endangered from such action. *In this case only*, remove the victim to another location, but no farther than is necessary for safety. If the new location is more than a few feet away, artificial respiration should be given while the victim is being moved. If the method of transportation prohibits the use of the Shaeffer prone pressure method, other methods of resuscitation may be used. Pressure may be exerted on the front of the victim's diaphragm, or the direct mouth-to-mouth method may be used. Artificial respiration, once started, must be continued, without loss of rhythm.

b. Lay the victim in a prone position, one arm extended directly overhead, and the other arm bent at the elbow so that the back of the hand supports the head. The face should be turned away from the bent elbow so that the nose and mouth are free for breathing.

c. Open the victim's mouth and remove any foreign bodies, such as false teeth, chewing gum, or tobacco. The mouth should remain open, with the tongue extended. Do not permit the victim to draw his tongue back into his mouth or throat.

d. If an assistant is available during resuscitation, he should loosen any tight clothing to permit free circulation of blood and to prevent restriction of breathing. He should see that the victim is kept warm, by applying blankets or other covering, or by applying hot rocks or bricks wrapped in cloth or paper to prevent injury to the victim. The assistant should also be ever watchful to see that the victim does not swallow his tongue. He should continually wipe from the victim's mouth any frothy mucus or saliva that may collect and interfere with respiration.

e. The resuscitating operator should straddle the victim's thighs, or one leg, in such manner that:

(*1*) the operator's arms and thighs will be vertical while applying pressure on the small of the victim's back;

(*2*) the operator's fingers are in a natural position on the victim's back with the little finger lying on the last rib;

(*3*) the heels of the hands rest on either side of the spine as far apart as convenient without allowing the hands to slip off the victim;

(*4*) the operator's elbows are straight and locked.

f. The resuscitation procedure is as follows:

(*1*) Exert downward pressure, not exceeding 60 pounds, for 1 second.

(*2*) Swing back, suddenly releasing pressure, and sit up on the heels.

(*3*) After 2 seconds rest, swing forward again, positioning the hands exactly as before, and apply pressure for another second.

g. The forward swing, positioning of the hands, and the downward pressure should be accomplished in one continuous motion, which requires 1 second. The release and backward swing require 1 second. The addition of the 2-second rest makes a total of 4

TL 15338-D

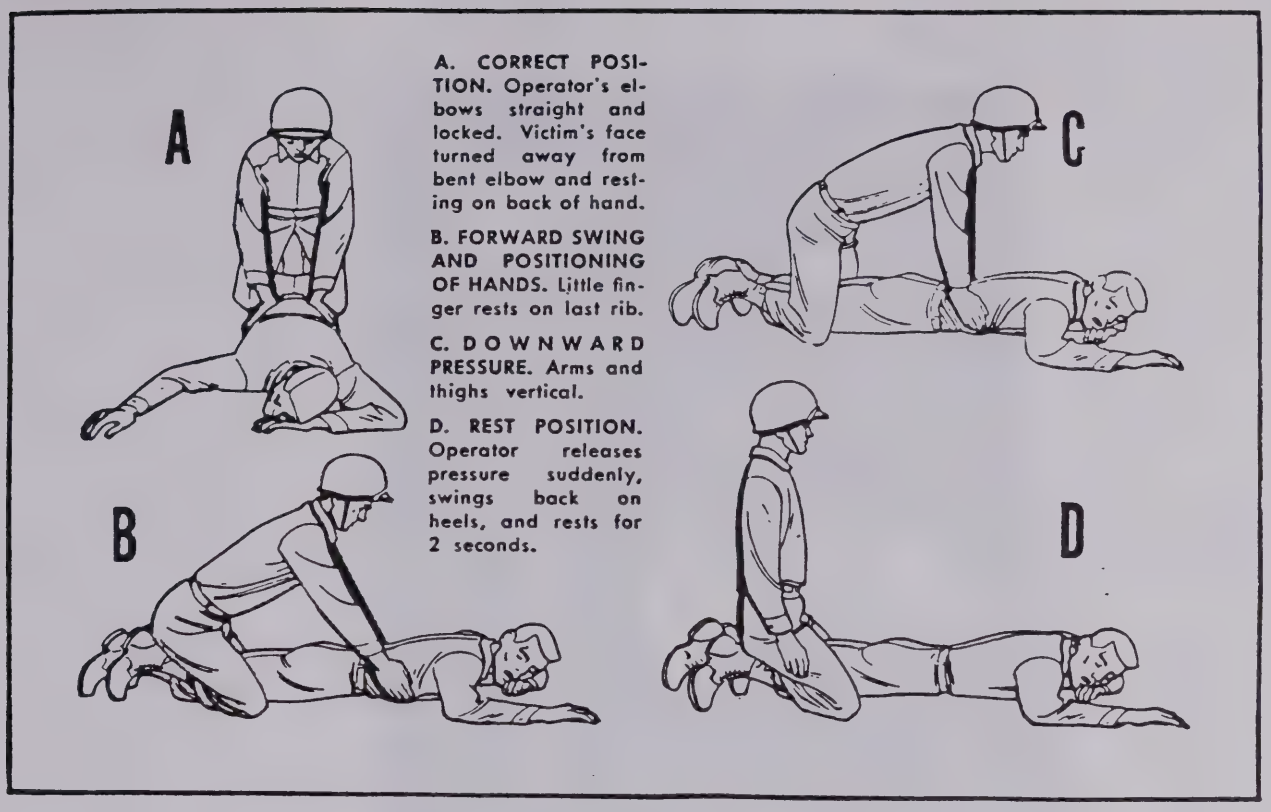

A. CORRECT POSITION. Operator's elbows straight and locked. Victim's face turned away from bent elbow and resting on back of hand.

B. FORWARD SWING AND POSITIONING OF HANDS. Little finger rests on last rib.

C. DOWNWARD PRESSURE. Arms and thighs vertical.

D. REST POSITION. Operator releases pressure suddenly, swings back on heels, and rests for 2 seconds.

seconds for a complete cycle. Until the operator is thoroughly familiar with the correct cadence of the cycle, he should count the seconds aloud, speaking distinctly and counting evenly in thousands. Example: one thousand and one, one thousand and two, etc.

h. Artificial respiration should be continued until the victim regains normal breathing or is pronounced dead by a medical officer. Since it may be necessary to continue resuscitation for several hours, relief operators should be used if available.

RELIEVING OPERATOR.

The relief operator kneels beside the operator and follows him through several complete cycles. When the relief operator is sure he has the correct rhythm, he places his hands on the operator's hands without applying pressure. This indicates that he is ready to take over. On the backward swing, the operator moves and the relief operator takes his position. The relieved operator follows through several complete cycles to be sure that the new operator has the correct rhythm. He remains alert to take over instantly if the new operator falters or hesitates on the cycle.

STIMULANTS.

a. If an inhalant stimulant is used, such as aromatic spirits of ammonia, the individual administering the stimulant should first test it himself to see how close he can hold the inhalant to his own nostril for comfortable breathing. Be sure that the inhalant is not held any closer to the victim's nostrils, and then for only 1 or 2 seconds every minute.

b. After the victim has regained consciousness, he may be given hot coffee, hot tea, or a glass of water containing ½ teaspoon of aromatic spirits of ammonia. *Do not give any liquids to an unconscious victim.*

CAUTIONS.

a. After the victim revives, keep him LYING QUIETLY. Any injury a person may have received may cause a condition of shock. Shock is present if the victim is pale and has a cold sweat, his pulse is weak and rapid, and his breathing is short and gasping.

b. keep the victim lying flat on his back, with his head lower than the rest of his body and his hips elevated. Be sure that there is no tight clothing to restrict the free circulation of blood or hinder natural breathing. Keep him warm and quiet.

c. A resuscitated victim must be watched carefully as he may suddenly stop breathing. *Never leave a resuscitated person alone until it is CERTAIN that he is fully conscious and breathing normally.*

TL 15338-E

TM 854-1

Figure 1. Radio Receiver R-388/URR.

CHAPTER 1

INTRODUCTION

Section I. GENERAL

1. Scope

This technical manual contains instructions for the installation, operation, maintenance, and repair of Radio Receiver R–388/URR. Two appendixes covering a list of references and an identification table of parts, are also provided at the back of the manual.

2. Forms and Records

The following forms will be used for reporting unsatisfactory conditions of Army matériel and equipment:

a. DD Form 6 (Report of Damaged or Improper Shipment) will be filled out and forwarded as prescribed in SR 745–45–5 (Army) and AFR 71–4 (Air Force).

b. DA AGO Form 468, Unsatisfactory Equipment Report, will be filled out and forwarded to the Office of the Chief Signal Officer as prescribed in SR 700–45–5.

c. USAF Form 54 (Unsatisfactory Report) will be filled out and forwarded to Commanding General, Air Matériel Command, Wright-Patterson Air Force Base, Dayton, Ohio, as prescribed in AFR 65–26.

d. DA AGO Form 11–238 (Operator First Echelon Maintenance Check List for Signal Corps Equipment (Radio Communication, Direction Finding, Carrier, Radar)), will be prepared in accordance with instructions on the back of the form.

e. DA AGO Form 11–239 (Second and Third Echelon Maintenance Check List for Signal Corps Equipment (Radio Communication, Direction Finding, Carrier, Radar)), will be prepared in accordance with instructions on the back of the form.

f. Use other forms and records as authorized.

Section II. DESCRIPTION AND DATA

3. Purpose and Use

a. Radio Receiver R–388/URR is a communications receiver, having exceptional frequency stability and calibration accuracy. The receiver covers the frequency range from .5 to 30.5 mc (megacycles). Although useful as a general purpose communications receiver, its accuracy and stability make it especially useful where it is desired to receive known frequencies without searching or frequent readjustment, and for the reception of frequency-shift keying transmissions. It is, therefore, particularly adaptable to the reception of radioteletype signals.

b. The receiver is intended for use as part of fixed or mobile installations. See the appropriate instruction book for complete details on each application.

c. Figure 2 is a simplified block diagram of the receiver in use and shows the minimum additional equipment required for operation.

d. Figure 3 is a simplified block diagram of the receiver in use with Radio Set AN/GRC–26A for the reception of radioteletype signals.

4. Technical Characteristics

a. Performance.

Frequency range___.5 mc to 30.5 mc.

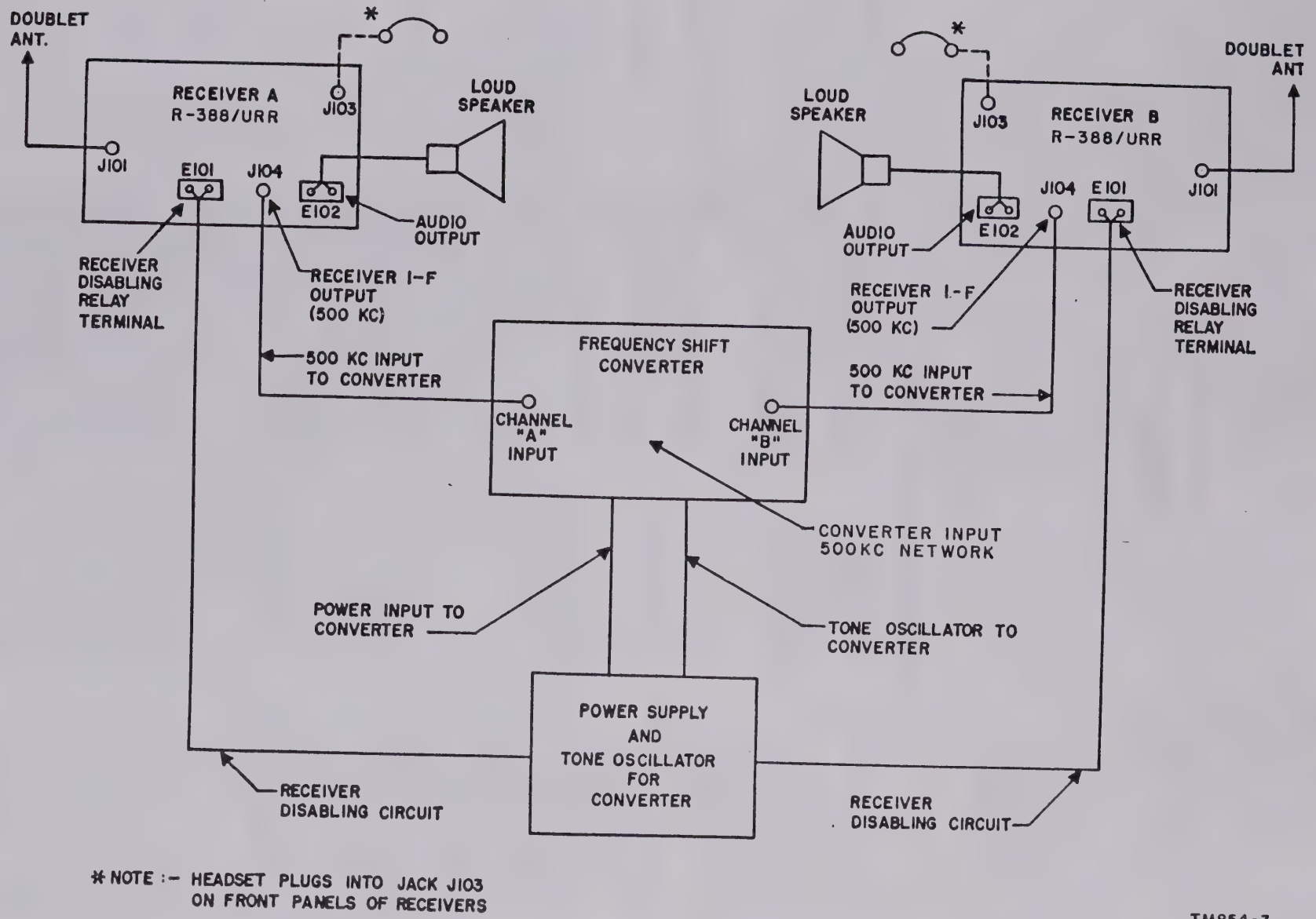

Figure 3. Receiver in use with frequency-shift converter for reception of radioteletype signals, simplified block diagram.

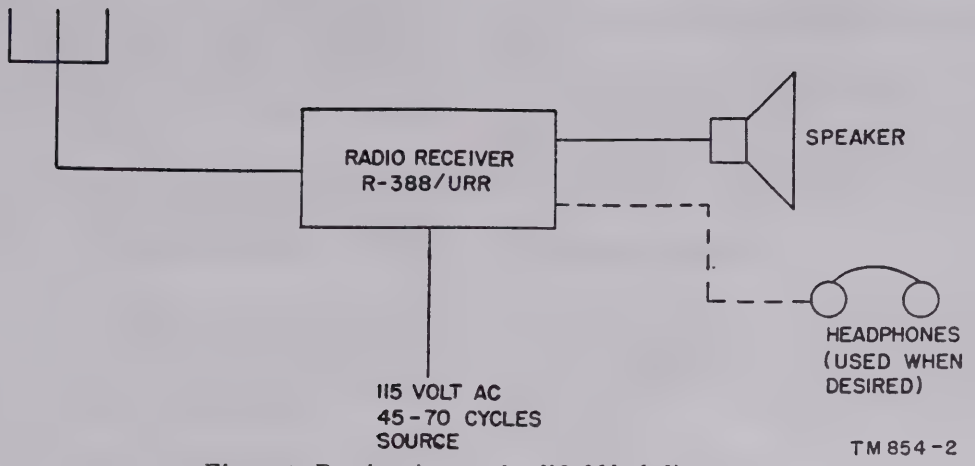

Figure 2. Receiver in use, simplified block diagram.

Receiver type_____Single, double, or triple conversion superheterodyne.
I-f frequency_____500 kc (kilocycles).
Types of reception_Voice, c-w (continuous-wave), and frequency-shift.
Number of tubes___18.
Tuning_____Linear, divided into thirty 1-mc tuning steps.
Calibration _____Direct reading in mc and kc.
Method of calibration. Built-in crystal oscillator (100 kc).
Calibration points__Every 100 kc.
Frequency stability_Over-all stability within 1 kc for average conditions; within 2 kc for extreme conditions.
Sensitivity_____A-m (amplitude-modulated) signal input of 5 uv (microvolts) maximum required to produce 500 mw (milliwatts) power output at a signal-plus-noise to noise ratio of 10 to 1.
Selectivity_____Approximately 6 kc at 6 db (decibels) down, and not greater than 20 kc at 60 db down (total bandwidth) from resonant frequency. With crystal filter in operation, at 6 db down, the bandwidth may be varied from approximately .2 kc to 2.0 kc.
Spurious signal responses. Down at least 50 db.
Avc (automatic volume control). Less than 4-db increase in audio power output with an increase in r-f (radio-frequency) signal from 5 to 125,000 uv (microvolts).
Noise limiter_____Series type ahead of first audio stage, effective for c-w operation.
Output impedances_4- and 600-ohm impedances.
Audio-frequency response. With 1,000 cps (cycles per second) reference, response down not more than 3 db at 200 cps, and not more than 7 db at 2,500 cps.
Antenna input impedance. Unbalanced to match short whip antenna (50 ohms, 100 $\mu\mu$f (micromicrofarads)).
Power requirements. 85 watts at 115 or 230 volts, 45 to 70 cps.
Weight_____35 pounds.

b. Tuning Steps.

BAND CHANGE switch position	*Coverage (mc)*
No. 1	.5 to 1.5
No. 2	1.5 to 2.5
No. 3	2.5 to 3.5
No. 4	3.5 to 4.5
No. 5	4.5 to 5.5
No. 6	5.5 to 6.5
No. 7	6.5 to 7.5

through the lower opening. This dial is graduated in 1-kc intervals, and rotates exactly 10 times while the slide-rule MEGACYCLES dial is covering 1 mc. Frequency is read by adding the readings of both dials.

b. The receiver is constructed as a panel and shelf assembly for rack mounting. Top and bottom covers on the chassis protect it from dust.

c. Headphone and speaker jacks are provided at the lower left corner of the front panel. In addition, both 4- and 600-ohm output terminals are provided at the rear of the chassis.

d. The receiver has a 100-kc crystal calibration oscillator which enables checking dial calibration every 1/10-mc interval throughout the tuning range. Intermediate dial readings are within 300-cycle accuracy.

e. A coaxial antenna input connector and a coaxial connector for tapping the i-f output are also provided at the rear of the chassis.

f. A second terminal board on the rear of the chassis permits connection of an external circuit to control the built-in remote-disabling relay.

g. Power is applied through the cord extending from the rear of the chassis, with an overload protection fuse for the power input circuit also located at the rear of the receiver.

7. Running Spares

A group of running spares is supplied with the receiver to provide replacements for all normally expendable items, such as tubes, pilot lamps, and fuses. The following is a list of running spares:

1 tube, type 5V4G.
1 tube, type 6AK5.
1 tube, type 6AQ5.
1 tube, type 6BA6.
1 tube, type 6BE6.
1 tube, type 12AU7.
1 tube, type 12AX7.
1 tube, type OA2.
5 fuses, cartridge type, 1 ampere, 250 volts.
1 lamp, Mazda No. 47.

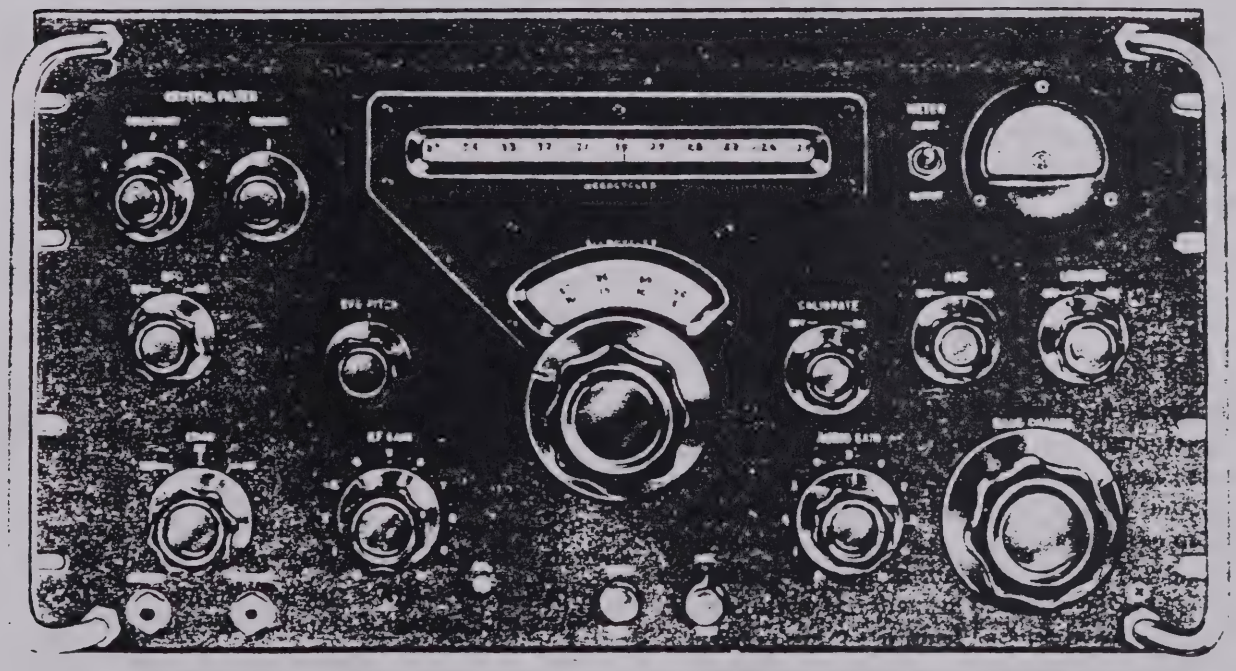

Figure 4. Radio Receiver R–388/URR, front view.

BAND CHANGE switch position	*Coverage (mc)*
No. 8	7.5 to 8.5
No. 9	8.5 to 9.5
No. 10	9.5 to 10.5
No. 11	10.5 to 11.5
No. 12	11.5 to 12.5
No. 13	12.5 to 13.5
No. 14	13.5 to 14.5
No. 15	14.5 to 15.5
No. 16	15.5 to 16.5
No. 17	16.5 to 17.5
No. 18	17.5 to 18.5
No. 19	18.5 to 19.5
No. 20	19.5 to 20.5
No. 21	20.5 to 21.5
No. 22	21.5 to 22.5
No. 23	22.5 to 23.5
No. 24	23.5 to 24.5
No. 25	24.5 to 25.5
No. 26	25.5 to 26.5
No. 27	26.5 to 27.5
No. 28	27.5 to 28.5
No. 29	28.5 to 29.5
No. 30	29.5 to 30.5

c. High-Frequency Oscillators V105 Crystals and Injection Frequencies

Crystal	*Band*	*Receiver frequency (mc)*	*Crystal frequency (mc)*	*Injection frequency (mc)*
1	1	.5 to 1.5	4	8 and 12
	2	1.5 to 2.5		
	3	2.5 to 3.5		
2	4	3.5 to 4.5	6	6
3	5	4.5 to 5.5	8	8
	6	5.5 to 6.5		8
	13	12.5 to 13.5		16
	14	13.5 to 14.5		16
4	7	6.5 to 7.5	10	10
	8	7.5 to 8.5		10
	17	16.5 to 17.5		20
	18	17.5 to 18.5		20
	27	26.5 to 27.5		30
	28	27.5 to 28.5		30
5	9	8.5 to 9.5	12	12
	10	9.5 to 10.5		12
	21	20.5 to 21.5		24
	22	21.5 to 22.5		24
6	11	10.5 to 11.5	14	14
	12	11.5 to 12.5		14
	25	24.5 to 25.5		28
	26	25.5 to 26.5		28
7	15	14.5 to 15.5	9	18
	16	15.5 to 16.5		18
8	19	18.5 to 19.5	11	22
	20	19.5 to 20.5		22
9	23	22.5 to 23.5	13	26
	24	23.5 to 24.5		26
10	29	28.5 to 29.5	10.6	32
	30	29.5 to 30.5		32

d. Tube Table.

Symbol	*Type*	*Function*
V101	6AK5	R-f amplifier
V102	6BE6	First mixer
V103	6BE6	Intermediate mixer
V104	6BA6	Calibration oscillator
V105	6AK5	Crystal oscillator
V106	6BE6	Second mixer
V107	6BA6	First i-f (intermediate-frequency) amplifier
V108	6BA6	Second i-f amplifier
V109	6BA6	Third i-f amplifier
V110	12AX7	Detector and avc rectifier
V111	12AU7	Avc amplifier and i-f output
V112	12AX7	Noise limiter and a-f (audio-frequency) voltage amplifier
V113	6AQ5	A-f power amplifier
V114	6BA6	Beat-frequency oscillator
V115	5V4	Power rectifier
V116	OA2	Voltage regulator
V001	6BA6	Variable-frequency oscillator
V002	6BA6	Buffer amplifier

5. Packaging Data

Radio Receiver R–388/URR and its spare parts are packed for export shipment in a wooden box. Between the receiver and wooden box, protection from water, moisture, and vapors is obtained by two barrier packages and two cartons. The arrangement of these protective layers is shown in figure 7. The front panel of the receiver is protected by a padded wooden frame. All sides of the receiver are padded with corrugated cardboard. Bags of silica gel are placed within the inner covering of the receiver to absorb any moisture locked in when the receiver is packed. A separate carton contains the spare parts, all of which are packed individually.

6. Description of Receiver

(figs. 4 and 5)

a. Radio Receiver R–388/URR is an 18-tube superheterodyne receiver for receiving a-m phone signals and c-w signals in the frequency range of .5 mc to 30.5 mc. The tuning range is divided into thirty 1-mc tuning steps which are selected by the BAND CHANGE knob at the lower right end of the receiver. Each change of band causes a different slide-rule type scale, graduated in tenths of megacycles, to appear in the upper MEGACYCLES dial opening. The center knob is the main tuning control, and it turns the KILOCYCLES dial which is visible

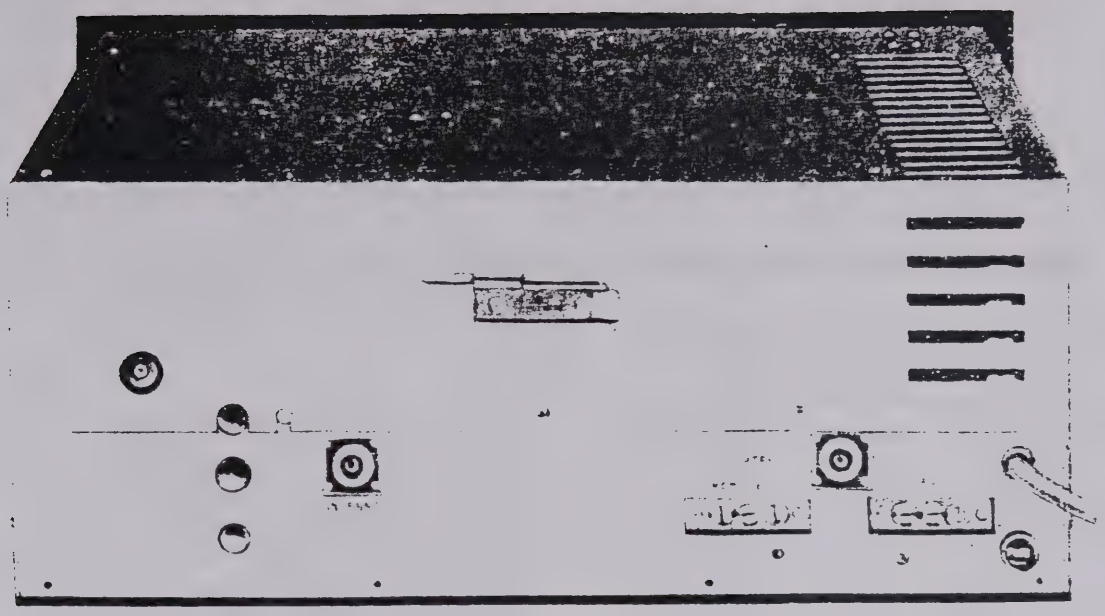

Figure 5. Radio Receiver R–388/URR, rear view.

8. Additional Equipment Required

The following material is *not* supplied as part of Radio Receiver R–388/URR, but it is necessary for its operation.

a. A suitable antenna for the reception of 500-kc to 30.5-mc signals, either single wire or doublet, and a good ground connection where possible.

b. A 115- or 230-watt source of a-c (alternating current), capable of providing at least 80 watts of power.

c. A headset or a loudspeaker of suitable impedance.

d. A standard cabinet rack for mounting the receiver.

CHAPTER 2

OPERATING INSTRUCTIONS

Section I. SERVICE UPON RECEIPT OF RADIO RECEIVER R–388/URR

9. Siting

(fig. 6)

The best location for radio equipment depends on the tactical situation and local conditions, such as the following: possible installation in a vehicle, the terrain, the type of housing available, the need to house the equipment where it cannot be seen, and the need of easy access to messengers. Best reception is obtained when the antenna is located in an open area with no large structures nearby which may cause attenuation of incoming signals. Avoid operation near steel structures. Choose, if possible, a location on a hilltop or elevation.

10. Uncrating, Unpacking, and Checking New Equipment

Note.—For used or reconditioned equipment, refer to paragraph 13.

a. General. Equipment may be shipped in oversea packing cases (*b* below) or in domestic packing cases (*e* below). When new equipment is received, select a location where the equipment may be unpacked without exposure to the elements and which is convenient to the permanent or semipermanent installation of the equipment. Aside from checking to make sure that all carrying cases are present and that the equipment is undamaged, no special unpacking and uncrating procedures are necessary for equipment shipped in carrying cases.

Caution: Be careful in uncrating, unpacking, and handling the equipment; it is easily damaged. If it becomes damaged or exposed, a complete overhaul might be required or the equipment might be rendered useless.

b. Step-by-Step Instructions for Uncrating and Unpacking Export Shipments (fig. 7).

(1) Place the packing case as near the operating position as convenient.
(2) Cut and fold back the steel straps.
(3) Remove the nails with a nail puller. Remove the top and one side of the packing case. Do not attempt to pry off the sides and top; this may damage the equipment.
(4) Remove the waterproof metal container or moistureproof barrier and any excelsior or corrugated paper covering the equipment inside the case.
(5) Remove the equipment from its inner case and place it on the workbench or near its final location.
(6) Inspect the equipment for possible damage incurred during shipment.

c. Opening Cardboard Carton and Waterproof Barrier. No special instructions are needed for opening the waterproof paper barrier and removing the equipment from the cardboard carton.

d. Checking. Check the contents of the carton against the master packing slip. Check for broken tubes and check that tubes and crystals are inserted in the correct positions (par. 11).

e. Unpacking Domestic Packing Cases. Radio equipment may be received in domestic packing cases. The instructions given in *b* above also apply to unpacking domestic shipments. Cut the metal bands. Open the cartons that protect the equipment; or, if heavy wrapping paper has been used, remove it carefully and take out the components. Check the contents of the packing case against the master packing slip.

Note.—Save the original packing cases and containers for both export and domestic shipments. They can be used again when the equipment is repacked for storage or shipment.

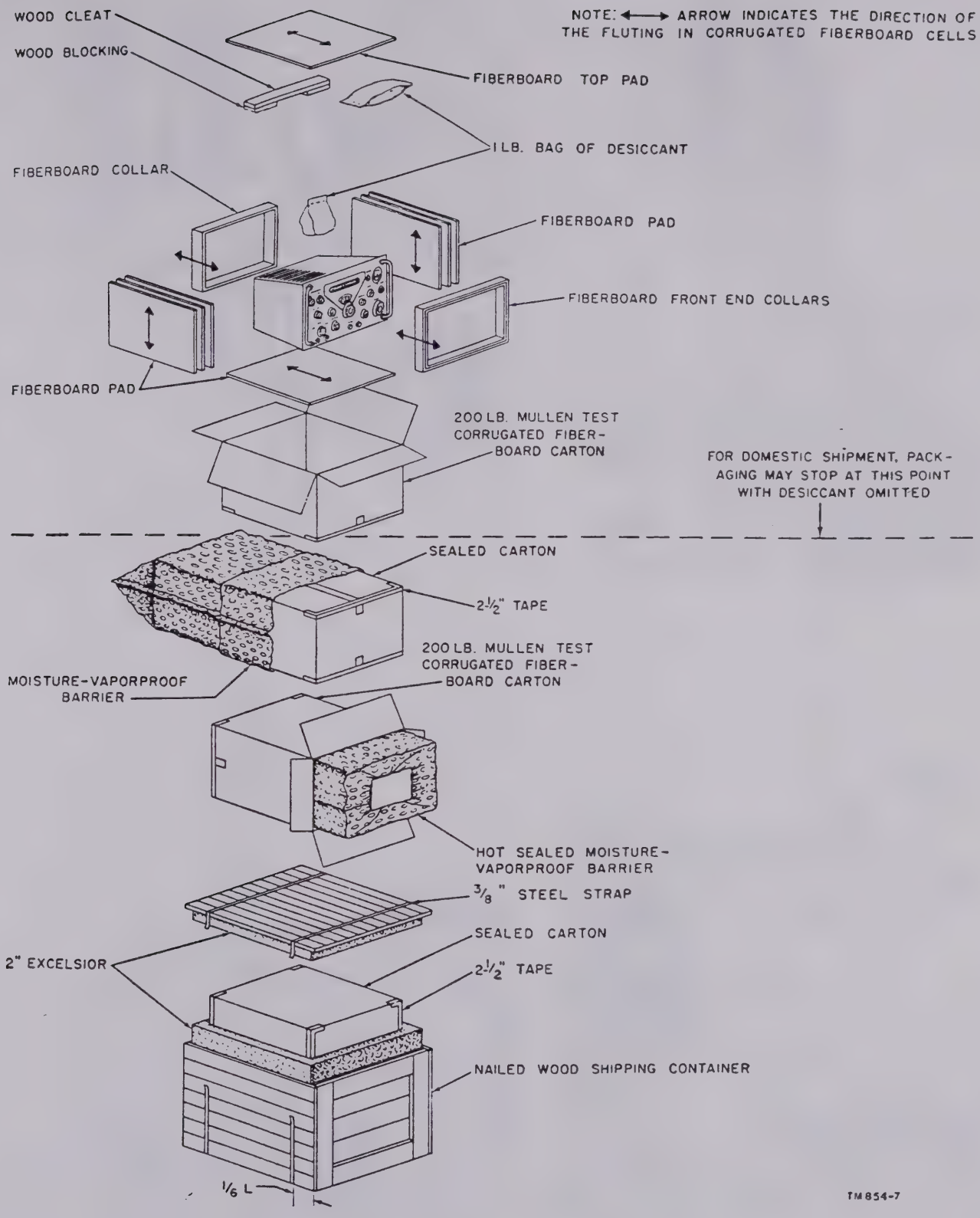

Figure 7. Packaging and packing of Radio Receiver R-388/URR.

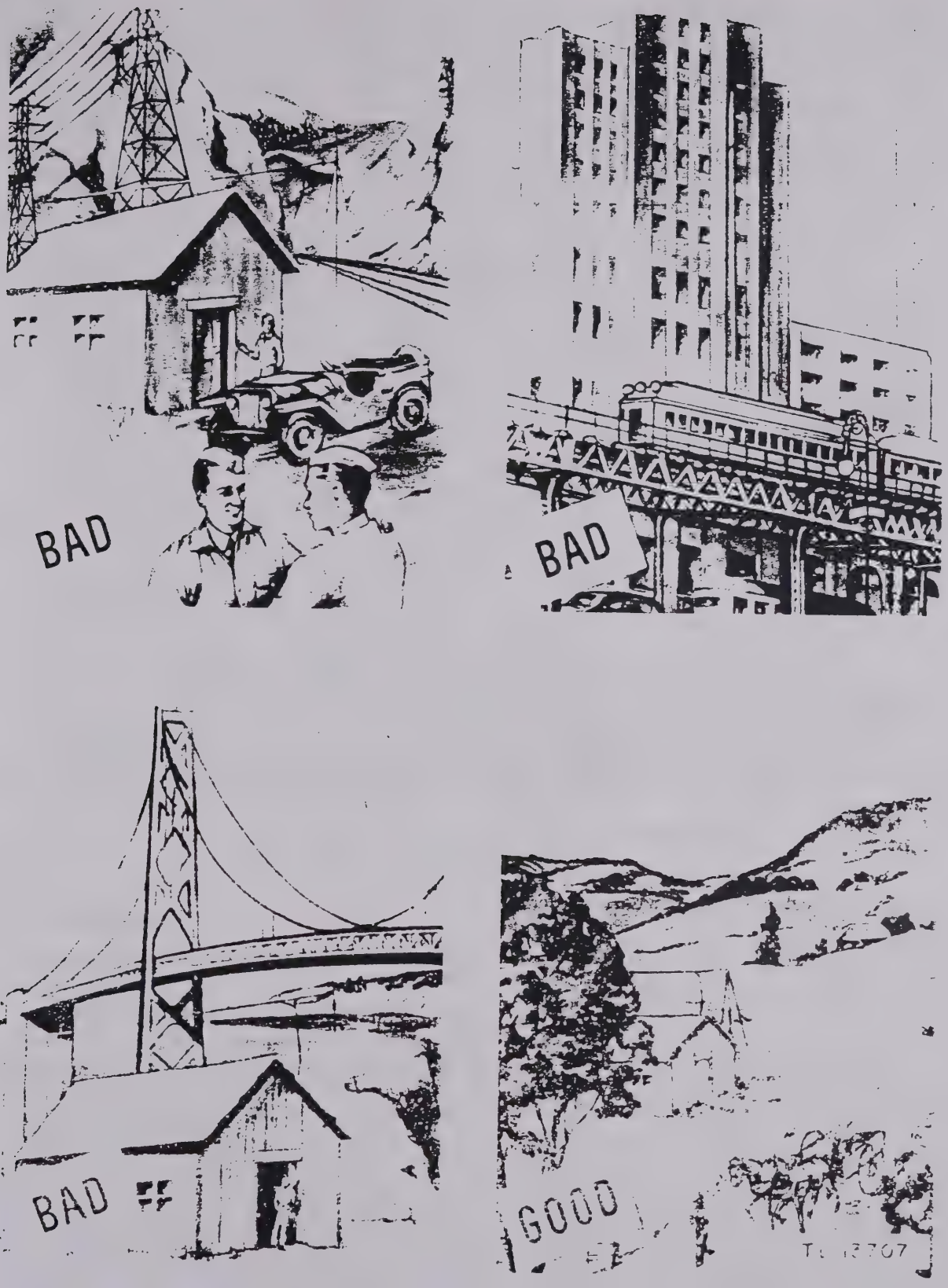

Figure 6. Siting, good and bad locations.

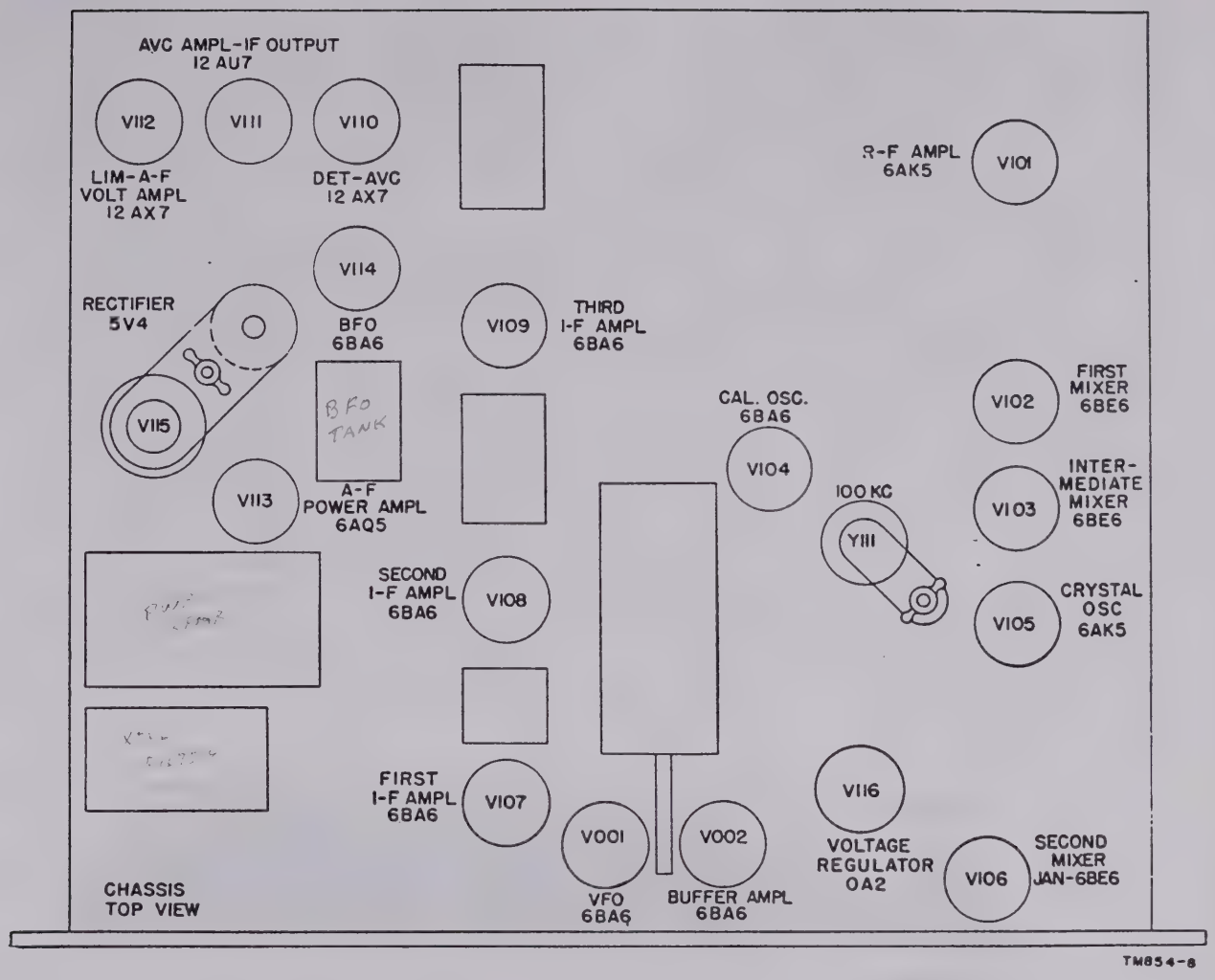

Figure 8. Radio-Receiver R–388/URR, tube location diagram.

11. Installation

To install Radio Receiver R–388/URR, proceed as follows:

a. Before installing the equipment, check the tubes. Remove the top dust cover from the chassis by removing the three screws which hold the dust cover to the rear of the chassis. A Phillips-head screw driver is mounted on the outside of the dust cover at the rear of the receiver (fig. 5). Check all tubes and crystals that they are in the correct sockets (fig. 8) and that none are broken. Note that all tubes except V115 are held in place by means of standard tube shields of the bayonet mounting type. Tube V115 and crystal Y111 are held in place by a strap and wingnut as shown. After checking, replace the dust cover by first mating the three cut-outs along the upper edge of the dust cover with the three studs on the chassis, and then replacing the three hold-down screws on the back.

b. Check the 1½-ampere fuse mounted in the fuseholder at the rear of the chassis.

c. The radio receiver is intended for mounting in a standard rack mounting. The front panel is 19 inches wide and 10½ inches high, and is slotted for mounting screws at points 1½, 3¾, 6¾, and 9 inches from the bottom. A depth of 13¼ inches must be available. For complete instructions on the installation of the receiver as part of complete radio sets, see the instruction book covering the particular set.

12. Connections

When the radio receiver is to be installed as part of a particular unit, make all connections as described in the instruction book covering that set. When the radio receiver is to be used independently, make connections (figs. 3 and 9) as follows:

a. Antenna Connection.

(1) Connect the antenna and ground, by means of a coaxial cable and connector, to the ANTENNA jack (J101) on the rear of the receiver.

(2) If the receiver is to be operated in conjunction with a transmitter, the receiver disabling relay (terminals 1 and 2 of E101) should be connected to the transmitter in such a way that the relay is energized by a 12-volt dc (direct current) when the transmitter is radiating.

b. Power Connection.

(1) The input power connection is made with the cord and plug (P101) which is permanently attached to the rear of the receiver chassis. Connection to a source of 115-volt 45- to 70-cycle ac should be made.

(2) If it is required to operate the receiver on 230-volt 45- to 70-cycle ac, the leads from the power transformer (T108) will have to be reconnected inside the receiver as follows:

(*a*) Disconnect transformer leads No. 2 and 3 from the input cord and power switch (S113), respectively, but leave leads No. 1 and 4 connected.

(*b*) Connect leads No. 2 and 3 together, solder, and cover the splice with electricians tape.

c. Speaker Connection.

(1) A speaker or an audio line, with approximately 600 ohms input impedance can be connected by means of

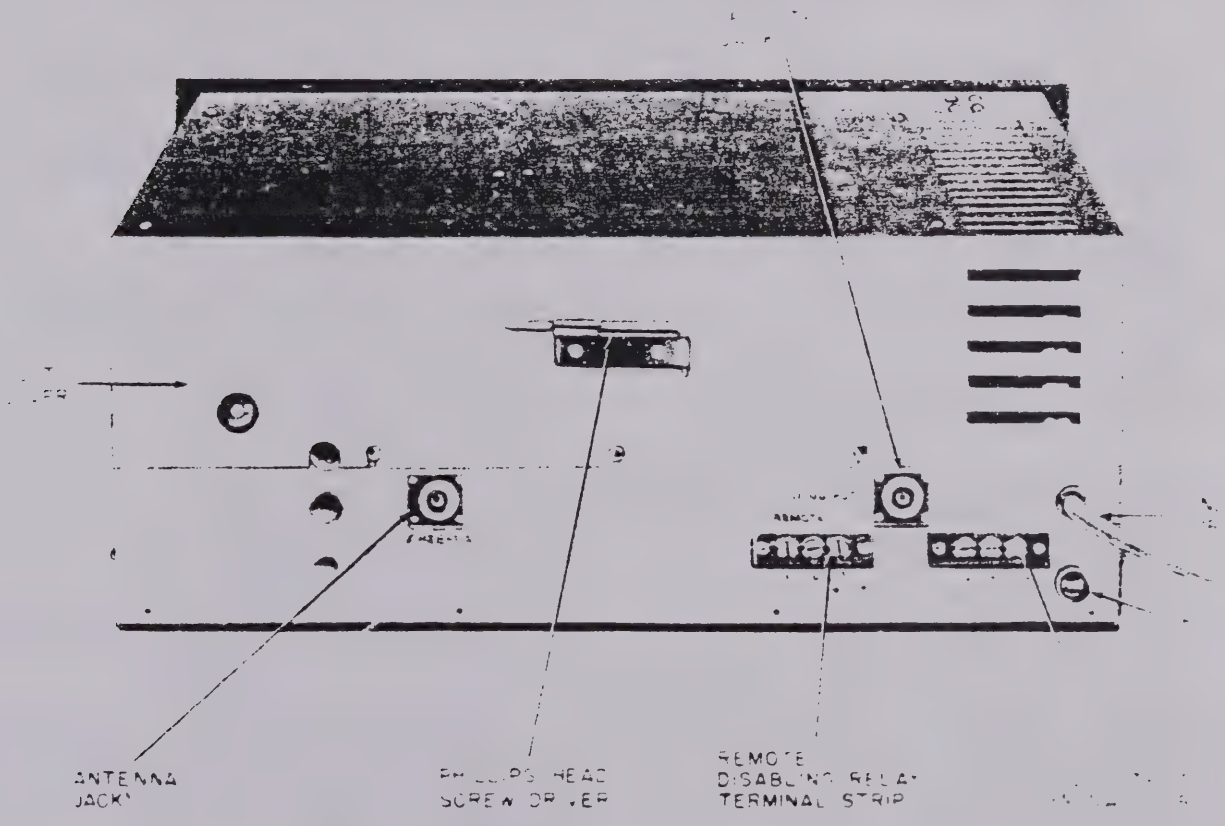

Figure 9. Radio Receiver R–388/URR, recr view, showing connections.

a standard cord and plug at the SPEAKER jack (J102) on the front panel. It can also be connected at the 600-ohm and ground terminals of the AUDIO terminal board (E102) at the rear of the receiver.

(2) A speaker with a 4-ohm voice coil can be connected only by means of the 4-ohm and ground terminals of the AUDIO terminal board.

d. Headphones Connection. Headphones of 600 or more ohms impedance can be connected by means of a standard cord and plug at the PHONES jack (J103) on the front panel.

e. I-F Output Connection. When radioteletype reception is desired, connection to the radioteletype converters can be made by plugging in a 70-ohm coaxial cord and connector at the IF OUTPUT jack (J104) on the rear of the receiver. The radioteletype converter must be capable of being tuned to the receiver 500-kc intermediate frequency.

13. Service Upon Receipt of Used or Reconditioned Equipment

a. Follow the instructions in paragraph 10 for uncrating, unpacking, and checking the equipment.

b. Check the used or reconditioned equipment for tags or other indications pertaining to changes in the wiring of the equipment. If any changes in wiring have been made, note the change in this manual, preferably on the schematic diagram.

c. Check the operating controls for ease of rotation. If lubrication is required, refer to the lubrication instructions in paragraphs 30 through 32.

d. Perform the installation and connection procedures given in paragraphs 11 and 12.

Section II. CONTROLS AND OPERATION UNDER USUAL CONDITIONS

14. Controls and Their Use

(fig. 10)

Table I lists the controls of the radio receiver and indicates their functions.

Table I. Controls

Control	Function
OFF-STANDBY-ON switch (S113)	In OFF position, opens primary power circuit to turn equipment off completely. In STANDBY position, excites transformer producing filament and plate voltage but does not apply plate or screen voltage to three i-f amplifier tubes, thereby disabling receiver. In ON position (provided REMOTE relay is not energized) receiver is completely operative.
RF GAIN (R148)	Varies amount of fixed bias on r-f amplifier and three i-f amplifier tubes.
AUDIO GAIN (R154)	Controls audio power output.
BAND CHANGE knob	Band selector. Switches coils, capacitors, crystals, tuned circuits, tubes, and MEGACYCLES scale as required for each of 30 tuning steps. Each half-revolution introduces another 1-mc tuning step.
MEGACYCLES scale	Indicates to nearest tenth mc (100 kc) the frequency to which receiver is tuned. Graduated in 10 divisions of 1/10 mc each, each division corresponding to one full turn of KILOCYCLES dial knob. The 1.5- to 2.5-mc and 2.5- to 3.5-mc band graduations are printed in red to indicate that the red scale on the KILOCYCLES dial must be used when operating on these bands.
KILOCYCLES dial knob	Main tuning control. Moves indicator across MEGACYCLES scale and turns KILOCYCLES dial. MEGACYCLES scale indicator moves one division for each full turn (100 divisions) of KILOCYCLES dial.
KILOCYCLES dial	Indicates tens and units figures, in kc, of frequency to which receiver is tuned. Combined with reading of MEGACYCLES dial gives tuned frequency in kc. For example, a reading of 14.1 on MEGACYCLES dial and a reading of 78 on KILOCYCLES dial indicates the frequency is 14,178 kc. There are two scales

Control	Function
	of 100 graduations each, running in opposite directions, one red, the other black. The red scale is used only for the 2.5- to 1.5-mc and 3.5- to 2.5-mc tuning steps.
ZERO ADJ. knob	Moves indicator line on KILOCYCLES dial a few divisions in either direction for calibration purposes.
BFO OFF-ON switch	In OFF position, shorts screen voltage of V114 to ground.
CALIBRATE OFF-ON switch (S118)	In ON position, 100-kc crystal oscillator V104 is operative for calibration purposes.
AVC OFF-ON switch (S115)	In ON position, AVC is operative.
LIMITER OFF-ON switch (S116)	In ON position, automatic noise limiter is operative.
CRYSTAL FILTER SELECTIVITY switch (S114)	In position 0, crystal filter is not used and selectivity is broadest. In positions 1 through 4, crystal filter is in circuit, with its selectivity, becoming progressively sharper at higher numbers.
CRYSTAL FILTER PHASING knob (capacitor C188)	Used for attenuating unwanted heterodyne frequencies. Raises or lowers, slightly, the rejection slot of the crystal filter.
METER INPUT-OUTPUT toggle switch (S117)	In OUTPUT position, connects meter to measure audio power output. In INPUT position connects meter as an S meter. Switch is momentary action type with INPUT as the normal position.
CAL. screw (C224)	Screw-driver adjustment for precise adjustment of crystal calibration to 100 kc.
BFO PITCH control	Adjusts the pitch of incoming c-w signals to suit the operator (BFO ON).

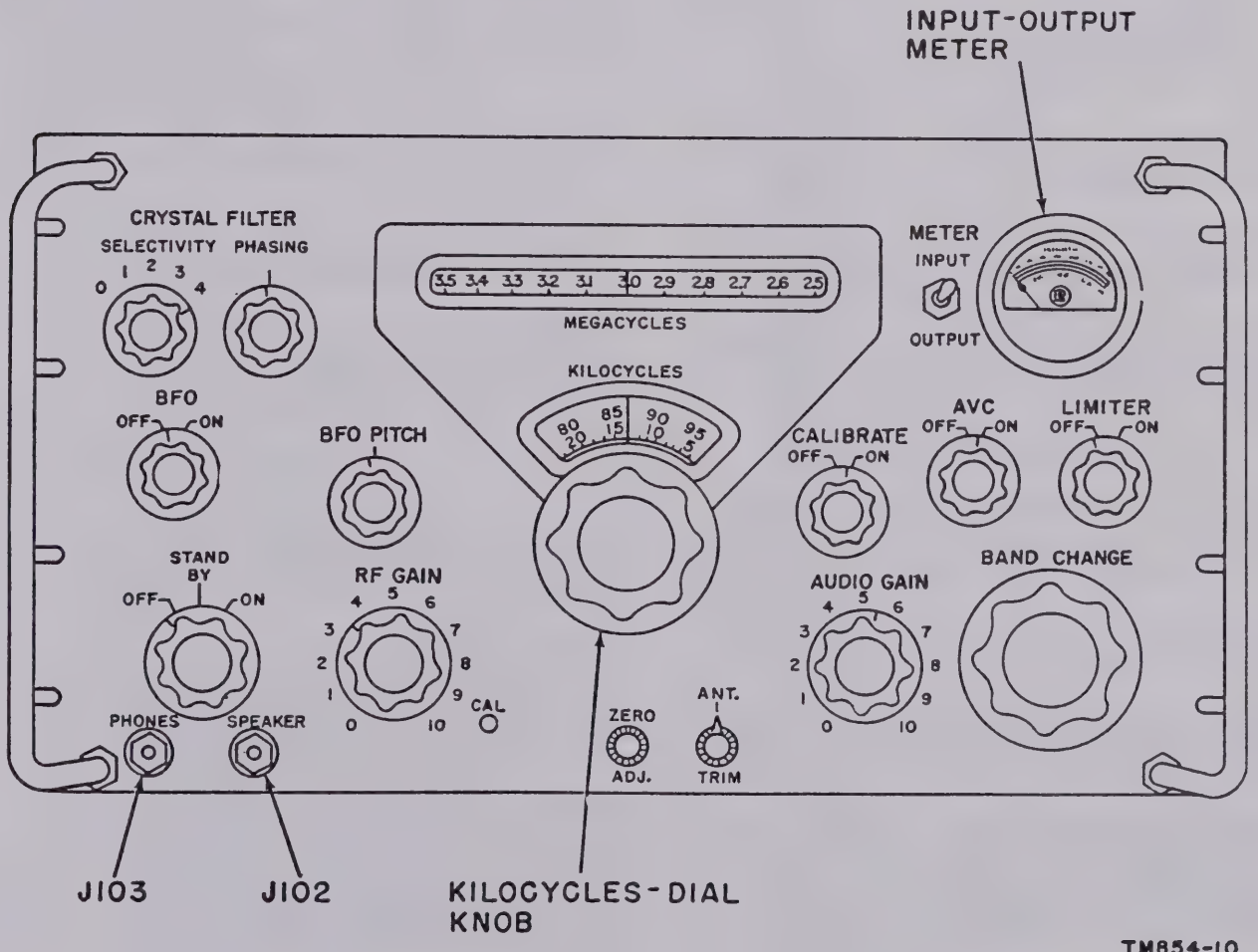

Figure 10. Radio Receiver R-388/URR, front panel.

Control	Function
Jacks and terminals	
ANTENNA jack (J101)	Connects antenna.
REMOTE terminal strip (E101)	Connects disabling relay with 12-volt d-c source.
IF OUTPUT jack (J104)	Connects i-f output to dual diversity unit for reception of radio-teletype signals.
AUDIO terminal strip (E102)	Provides connection for loudspeaker.
FUSE (F101)	1½-ampere cartridge fuse in series with a-c line.

15. Starting Procedure

a. Preliminary. Set the front panel controls as follows:

Control	*Position*
RF GAIN	Between 7 and 9.
AUDIO GAIN	Between 1 and 2.
BAND CHANGE knob	To band desired.
BFO OFF-ON switch	OFF.
CALIBRATE OFF-ON switch	OFF.
AVC OFF-ON switch	ON.
LIMITER OFF-ON switch	OFF.
CRYSTAL FILTER SELECTIVITY switch	0.
CRYSTAL FILTER PHASING control	Alined with mark on panel.

b. Starting.

(1) Turn OFF-STANDBY-ON switch to ON.

(2) Turn AUDIO GAIN control clockwise until noise or signal is heard. If there is no response, refer to paragraph 36.

16. Types of Operation

a. Radio Telegraph Reception.

(1) Place BFO switch to the ON position.

(2) Turn BFO PITCH control to midposition.

(3) Carefully set KILOCYCLES control to frequency of desired signal. If c-w signal is present, the beat note will vary as the exact frequency is approached. Tune for zero beat.

(4) Turn BFO PITCH control to position 1, 2, 3, or 4 as required to produce a desirable operating tone or to make signal readable above interference or unwanted signals on adjacent frequencies.

(5) Throw LIMITER switch to ON position.

(6) Throw AVC switch to ON position.

(7) Readjust AUDIO GAIN and RF GAIN controls to give suitable volume and best signal-to-noise ratio. Refer to paragraph 36.

(8) If unwanted heterodynes interfere with the signal, move CRYSTAL FILTER PHASING control back and forth until a setting is found for which the heterodyne is most attenuated. (The control will have to be moved farther for low-frequency heterodynes than for high ones.)

b. Tone or Voice Reception.

(1) Carefully set KILOCYCLES control to frequency of desired signal. If tone or voice signal is present, tune for loudest or least distorted signal.

(2) Turn CRYSTAL FILTER SELECTIVITY control to a higher position only if necessary to minimize interference from unwanted signals on adjacent frequencies.

(3) Throw LIMITER switch to ON position only if noise of the impulse type is being picked up.

(4) Readjust AUDIO GAIN and RF GAIN controls to give suitable volume and best signal-to-noise ratio.

(5) If unwanted heterodynes interfere with the signal, move CRYSTAL FILTER PHASING control back and forth until a setting is found for which the heterodyne is most attenuated.

c. Making Frequency Measurements. To determine accurately the frequency of an unknown signal or to make any frequency measurement, proceed as follows:

(1) Calibrate the receiver in accordance with the instructions given in paragraph 17*b*.

(2) Leave BFO switch at ON, and do not move BFO PITCH control after calibrating.

(3) Tune in the signal. A beat note should be audible as the exact frequency of the signal is approached. Using only the KILOCYCLES control, tune for zero beat.

(4) The receiver is now tuned to the exact frequency of the signal that can be read on the dials.

17. Calibrating Receiver

a. Although the over-all tuning accuracy of the receiver is within about 1 kc, every 100-kc portion of the tuning range can be individually calibrated to an accuracy of about *300 cycles* by means of the built-in 100-kc crystal oscillator and the ZERO ADJ. knob of the tuning dial. This oscillator emits a fundamental frequency of 100 kc and also every harmonic, 200 kc, 300 kc, etc., that is needed to cover the frequency range of the receiver. Three methods of calibrating the receiver can be used.

b. Use the following procedure to calibrate any portion of the tuning range:

(1) With the receiver on but the antenna disconnected, turn the dials to the nearest frequency which is an exact multiple of 100 kc in the range it is desired to calibrate. (For example, if it is desired to calibrate for a frequency of 14,230 kc, turn the dials to 14,200 kc.)

(2) Turn the BFO switch to the ON position and set the BFO PITCH control to line up exactly with the index on the panel.

(3) Turn the CALIBRATE switch to ON. A beat note should be audible.

(4) Turn the KILOCYCLES control so that zero beat is obtained. Do *not* touch the BFO PITCH control.

(5) Turn ZERO ADJ. control to move the dial indicator until it lines up exactly with 0 on the KILOCYCLES dial. The dial will now read accurately in this region.

c. To adjust the 100-kc calibration crystal to exact frequency against standard frequency transmissions, such as those from station WWV (Bureau of Standards radio station located in Washington, D.C. (but only for frequencies which are exact multiples of 100 kc)), use the following procedure.

(1) With the receiver on and the antenna connected, tune in the standard frequency signal. The BFO switch should be at ON and the BFO PITCH control knob marker position set to coincide with the panel mark. Using the main tuning knob, tune the WWV signal to zero beat.

(2) Do not change the BFO PITCH and main tuning knob positions. Turn the CALIBRATE switch to ON.

(3) If an audio signal is heard, carefully adjust the screw-driver CAL. adjustment for zero beat. The 100-kc signal harmonic is now exactly on frequency.

d. To avoid the necessity of recalibrating a frequency range every time it is used, the lower edge of the opening for the KILOCYCLES dial is engraved with a 10-division scale. By making a record or log of the calibrated position of the hairline for any frequency range, the hairline can be reset to the same position without calibrating whenever the receiver is again tuned to the same frequency range.

18. Zeroing Meter

To zero-set the meter for use as an input meter, procced as follows.

a. Turn the receiver on.

b. Place the BFO switch in the OFF position.

c. Turn the AVC switch ON.

d. Turn the CALIBRATE switch to OFF.

e. Turn the RF GAIN control to position 10.

f. Short circuit the antenna terminals, and turn METER ZERO control R140 (on receiver chassis) until the INPUT meter reads zero.

19. Stopping Procedure

To turn off the receiver, turn the OFF-STANDBY-ON switch to OFF.

20. Operating Precautions and Notes

The following notes will aid the operator in securing maximum performance from the receiving equipment.

a. The AVC control should be in the ON position for practically all reception. However, it may be turned off for c-w reception if desired.

b. For the best reception of weak keyed signals through noise picked up on the antenna or generated in the receiver, set the RF GAIN control to a higher number and reduce the set-

ting of the AUDIO GAIN control to give the desired audio output level. The LIMITER control should be in the ON position.

c. For the reception of phone or voice signals, keep the AVC control on and place the RF GAIN control as high as possible; use the AUDIO GAIN control to vary the output level in the loudspeaker or headset.

Section III. OPERATION UNDER UNUSUAL CONDITIONS

21. General

The operation of Radio Receiver R–388/URR may be difficult in regions where extreme cold, heat, humidity and moisture, sand conditions, etc., prevail. In the following paragraphs instructions are given on procedures for minimizing the effect of these unusual operating conditions.

22. Operation in Arctic Climates

Subzero temperatures and climatic conditions associated with cold weather affect the efficient operation of the equipment. Instructions and precautions for operation under such adverse conditions follow:

a. Handle the equipment carefully.

b. Keep the equipment warm and dry, if possible.

c. Wear a knitted woolen cap over the earphones when operating in the open air with headsets that do not have rubber earpieces. Frequently, when headsets without rubber earpieces are worn, the edges of the ears may freeze without the operator being conscious of this condition. Never flex rubber earcaps, since this action may render them useless. If water gets into the receivers, or if moistrue condenses within them, it may freeze and impede the actuation of the diaphragm. When this happens, remove the bakelite cap and remove the ice and moisture from the receiver.

d. When equipment that has been exposed to the cold is brought into a warm room, it will start to sweat and will continue to do so until it reaches room temperature. This condition also arises when equipment warms up during the day after exposure during a cold night. When the equipment has reached room temperature, dry it thoroughly.

23. Operation in Tropical Climates

When operated in tropical climates, radio equipment may be installed in tents, huts, or, when necessary, in underground dugouts. When equipment is installed below ground and when it is set up in swampy areas, moisture conditions are more acute than normal in the tropics. Ventilation is usually very poor, and the high relative humidity causes condensation of moisture on the equipment whenever the temperature of the equipment becomes lower than that of the ambient air. To minimize this condition, place lighted electric bulbs under the equipment.

24. Operation in Desert Climates

a. Conditions similar to those encountered in tropical climates often prevail in desert areas. Use the same measures to insure proper operation of the equipment.

b. The main problem which arises with equipment operation in desert areas is the large amount of sand, dust, and dirt which enters the moving parts of radio equipment, such as gears and bearings. The ideal preventive precaution is to house the equipment in a dustproof shelter. Since, however, such a building is seldom available and would require air conditioning, the next best precaution is to make the building in which the equipment is located as dustproof as possible with available materials. Hang wet sacking over the windows and doors, cover the inside walls with heavy paper, and secure the side walls of tents with sand to prevent their flapping in the wind.

c. Never tie power cords, signal cords, or other wiring connections to either the inside or the outside of tents. Desert areas are subject to sudden wind squalls which may jerk the connections loose or break the lines.

d. Take care to keep the equipment as free from dust as possible. Make frequent preventive maintenance checks (pars. 25–36). Pay particular attention to the condition of the lubrication of the equipment. Excessive amounts of dust, sand, or dirt that come into contact with oil and grease result in grit, which will damage the equipment.

CHAPTER 3

ORGANIZATIONAL MAINTENANCE INSTRUCTIONS

Section I. ORGANIZATIONAL TOOLS AND EQUIPMENT

25. Tools and Materials

The tools and materials contained in Tool Equipment TE–41 (the ordinary hand tools and materials normally available to organizational maintenance personnel) are required for organizational maintenance of the receiver. The tools are listed in Department of the Army Supply Catalog SIG 6–TE–41.

26. Special Tools

a. A set of four wrenches of different sizes for setscrews of the fluted socket type is mounted in a tension clasp on the under side of the dust cover.

b. A 3/16-inch steel rod with a 90° bend, machined at each end to handle Phillips-type screws, is mounted on the outer side rear of the dust cover, in a retainer.

c. Two phenolic alinement tools are mounted inside the receiver in a tension clasp near the meter.

Section II. PREVENTIVE MAINTENANCE SERVICES

27. Definition of Preventive Maintenance

Preventive maintenance is work performed on equipment (usually when the equipment is not in use) to keep it in good working order so that break-downs and needless interruptions in service will be kept to a minimum. Preventive maintenance differs from trouble shooting and repair since its object is to prevent certain troubles from occurring. See AR 750–5.

28. General Preventive Maintenance Techniques

a. Use No. 0000 sandpaper to remove corrosion, never use emery paper.

b. Use a clean, dry, lint-free cloth or a dry brush for cleaning.

(1) If necessary, except for electrical contacts, moisten the cloth or brush with Solvent, dry-cleaning (SD) ; then wipe the parts dry with a clean cloth.

(2) Clean electrical contacts with a cloth moistened with carbon tetrachloride. Then wipe them dry with a clean cloth.

c. If available, use dry compressed air at a line pressure not exceeding 60 pounds per square inch to remove dust from inaccessible places; be careful, however, or mechanical damage from the air blast may result.

d. For further information on preventive maintenance techniques, refer to TB SIG 178.

29. Performing Preventive Maintenance

The following preventive maintenance operations should be performed by organizational personnel at the intervals indicated, unless these intervals are reduced by the local commander, or unless the conditions of operation dictate otherwise:

Caution: Screws, bolts, and nuts should not be tightened carelessly. Fittings tightened beyond the pressure for which they are designed may be damaged or broken.

a. Daily.

(1) Clean exterior of cabinet and dial faces.

(2) Set ZERO ADJ. on KILOCYCLES dial (ch. 4).

(3) Check for loose dial knobs.

b. Weekly.

(1) Check calibration oscillator (par. 17) against station WWV or some other stable frequency source.

(2) Check the meter for zero adjustment. Use a nonmetallic screw driver to adjust METER ZERO control R140 located inside the receiver to the left of the BFO PITCH shaft.

(3) Blow dust out of interior of receiver, upper surface only, and dust off MEGACYCLE dial cylinder.

(4) Inspect fuse F101 and its fuseholder for corrosion, cracks, and lack of tension sufficient to insure good contact.

(5) Inspect power transformer T108 for excessive heating or lamination buzz.

c. Monthly. Remove receiver from rack. Disconnect all outlets. Make visual inspection of the following; replace if necessary and clean.

(1) Check tube sockets for dirt and corrosion. To remove shields, press down, turn counterclockwise and lift over tube.

(2) Check tubes, replace if necessary.

Caution: These tubes, except the rectifier, are of the miniature type, with wire pins that bend easily. If it has been determined that a particular tube is malfunctioning, check the pins and sockets for possible misalinement before discarding.

(3) Turn receiver over (dial face downward) on a flat surface so that the draw handles support it. With a Phillips screw-driver remove 15 screws from base plate and 4 screws from folded top end of plate. Slide off plate exposing under side of receiver.

(4) Check for corrosion and leaking electrolyte, particularly about base of the filter unit, C217, and the bathtub capacitors.

(5) Inspect base plate for telltale signs of solder or electrolyte stains.

(6) Inspect resistors for blistering, discoloration, or other indications of overheating.

(7) Check relay for indications of malfunctioning. Usually the rf section will be faulty if the relay is burned out. Burnish contacts.

(8) With probe, using light pressure, check for loose connections and cold solder joints.

(9) Inspect switch disks for dirt, corrosion, and loose contacts.

Caution: Do not insert probe or screw driver between contacts of switches. This action may *spring* the contacts.

(10) Check PHONES and SPEAKER jacks J103 and J102 for tight fit and good contact.

(11) Check wires, cords, cables, shields, and tubing, for cracks, cuts, frayed insulation, grounds, and shorts.

(12) Check crystal terminal strip on the chassis under side for secure fit. If the crystals are to be removed, it is recommended that they be taken out and replaced individually so that they will not be returned to the wrong sockets.

(13) Check mounting screws in tube sockets, etc., for mechanical looseness.

(14) Inspect variable capacitors for dirt, corrosion, and bent plates.

(15) Check coils for dirt, corrosion and damaged turns.

(16) Check the dry disk rectifier, CR101, for loose connections.

(17) Check band switching gears and cams for excessive accumulation of grit (par. 28).

(18) Dust the interior.

(19) Replace base plate and screws, using caution when tightening.

The Single Tube Product Detector

Commander Paul H. Lee, USNR, W3JHR
5209 Bangor Drive
Kensington, Md.

Don't trade your receiver in just because you think it is not suitable for sideband. Here is a simple modification that will provide a product detector and crystal controlled b.f.o. No outboard chassis or major structural changes are required and while designed for the Collins 51J-2 the circuit is applicable to most other receivers.

THE number of amateurs using single sideband is steadily increasing. More and more are seeing the light and are converting to this power-saving and spectrum-conserving mode of communications. To this I say a hearty "Amen!" The commercial companies and military systems have been using this method for years, and it is about time that the amateur fraternity caught up with progress, especially in view of our increasing numbers and dwindling spectrum space. This article is written to help the newcomer solve his single sideband receiver problem.

It is possible to receive single sideband on an old receiver that is satisfactory for c.w. or a.m., by turning on the b.f.o. and then reducing r.f. gain to the point where the signal is readable. Of course increased audio gain is required. Also, this method results in a considerable loss in sensitivity, since it is no longer possible to run the r.f. stages wide open. This situation is due to the fact that the diode detector is not designed for this mode of operation, and that b.f.o. injection level is insufficient. The i.f. signal must therefore be reduced to a very low level. Also, even though the desired i.f. signal may be sufficiently reduced, a strong undesired signal on an adjacent channel may be rectified, giving rise to interference that will be quite severe.

It is difficult to obtain the full benefits of single sideband reception under such makeshift conditions. A product detector is a necessity if one is really seriously interested in single sideband work. Unfortunately many receivers of recent, modern design do not contain product detectors. But instead of trading in that old receiver, why not make a simple modification to bring it up to date? It is very simple to install a product detector without cutting holes for additional tube sockets, making outboard adapters, or changing receiver circuitry materially. Many product detector circuits use several additional tubes, but the circuit described here requires no additional tubes, not even a socket change.

The station receiver at W3JHR is a Collins 51J-2 which is an excellent set for amateur and general coverage use. The commonly used 75A-series is quite similar to it, but is designed for those who like to be "partially blind," confining their listening to the amateur bands. The inherent long and short-term frequency stability of the Collins p.t.o. used in these sets is excellent. The accuracy of dial calibration and ease of tuning makes these receivers ideally suited for single sideband use. However, the product detector is a very desirable modification, and the conversion is easily done by changing the b.f.o. tube to a 6BE6 product detector. The original b.f.o. circuit of the 51J-2 is shown in fig. 1.

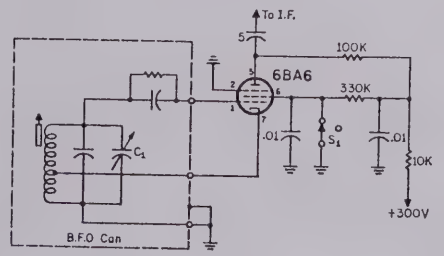

Fig. 1—Original b.f.o. circuit of the Collins 51J-2. A Standard Hartley is used with C_1 acting as the front panel B.F.O. PITCH control and S_1 B.F.O. ON-OFF.

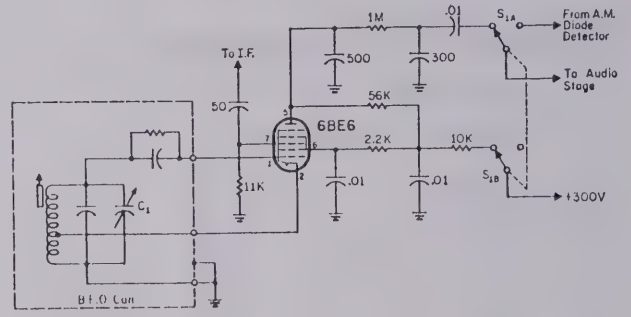

Fig. 2 — A 6BE6 replaces the original 6BA6 and the oscillator section of the tube acts as the b.f.o. The i.f. signal is fed to the mixer grid. Switch S_1, formerly B.F.O. ON-OFF, is now AM-SSB.

Conversion Circuit

The simple conversion to a self-excited product detector is illustrated in fig. 2. The 6BE6 is used in a mixer circuit. Its screen acts as the anode for the oscillator section of the circuit, with the existing b.f.o. coil and capacitor being used as the oscillatory circuit. The i.f. signal is fed into the injection grid. The values of the injection grid bias resistor, and of the screen dropping resistor are adjusted to give distortion-free product detector reception of single sideband signals. This can be checked by killing the oscillation in the 6BE6. This is most easily done by shorting cathode to ground. Without oscillation, there should be no audio output from the product detector while receiving signals of any type.

Conversion

The actual physical changes involved in the receiver are few. The tube substitution of the 6BE6 for the 6BA6 b.f.o. requires no socket change, only rewiring. The b.f.o. can is left alone. The b.f.o. on-off switch on the panel is replaced with one having an extra set of contacts which are used to switch the audio stage from the a.m. detector output to the product detector output, simultaneously with the application of plate voltage to the 6BE6. This switch is S_1 in the circuits. The additional audio wiring to this switch should be done with shielded wire to avoid a.c. or r.f. pickup.

It is also necessary to slow down the a.v.c. action by changing the time constant of the circuit, so that the a.v.c. rides along on the peaks of the single sideband signal. In my 51J-2 this is done by changing the value of R_{11} to 5.0 megohms. The reader will have to check out the a.v.c. circuit of his own receiver and make the necessary adjustments to the time constant R-C circuit. Thus the r.f. gain can be left wide open.

The modifications described above can be applied not only to the Collins series of receivers, but also to other makes as well. The b.f.o. circuitry may vary somewhat, but with a bit of ingenuity the reader can adapt this principle to his own set. Whatever the b.f.o. tube, it would be desirable to make a substitution that would not require a socket change, such as a 6BE6 for a 6BA6, or a 6SA7 for a 6J7 or 6SJ7, etc.

Crystal Controlled B.F.O.

If one wishes to carry the conversion a bit further and obtain a more sophisticated product detector, it may be crystal controlled. I did this to my 51J-2, to remove the only possible source of frequency instability in single sideband reception. Three crystals were used in the circuit shown in fig. 3. These are surplus FT-241-A low frequency crystals, for channels 359, 361, and 360. Their respective frequencies are 498.612, 501.388, and 500.000 kc. The 51J-2 i.f. frequency is 500 kc, and this choice of crystals provides for reception of upper or lower sideband, in addition to providing a crystal right on i.f. frequency for c.w. work or for frequency measurement.

[*Continued on page 118*]

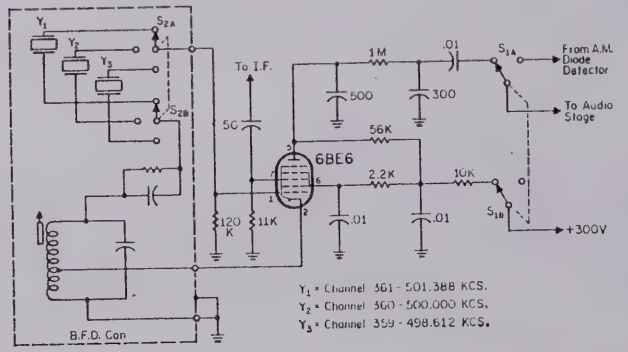

Fig. 3—The same circuit as fig. 2 except that the b.f.o. is crystal controlled. Crystals Y_1 and Y_3 are for the upper and lower sidebands and Y_2 is on the i.f. frequency for c.w. reception. Switch S_{2} is mounted where C_1 was formerly located.

Are You
TRADING?
Let me make you a trade-in offer on your used amateur equipment. All name-brand merchandise—late serial numbers assured. Quick delivery.

WRITE TODAY! Bill W9ZSO-KØIUH
COMMUNICATIONS EQUIPMENT CO.
518 State St., LaCrosse, Wis.
Phone 4-7373

Cush Craft

- 2 Meter with mast Model # AM-2M $8.70
- 2 Meter stacked COMPLETE Model # AM-22 $12.50
- 6 Meter with mast Model # AM-6M $12.50
- DUAL HALO with mast. Mod. # AM-26 $17.45

PORTABLE 3 El. 6 meter beam. (50" x 4" folded) Model No. A50-3P $10.95
CUSHCRAFT 621 HAYWARD ST. MANCHESTER, N. H.

CITIZENS BAND-SSB
CALL-IDENT TYMETER 10 Minute Station Call Reminder with 24 Hour Tymeter Clock
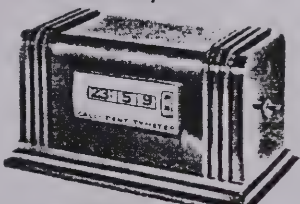

Model 1211 22.50
plus applicable tax
minute repeating ...er, buzzes warn... to sign in your ...l letters.
Walnut or ebony plastic case. H 4", W 7¾", D 4". Wt. ... lbs. 110V 60 cy. A.C. 1-yr. guarantee.
12 Hour System #112 . . . 17.50
At Your Dealer . . . or WRITE to
PENNWOOD NUMECHRON CO.
249 FRANKSTOWN AVE. PITTSBURGH 8, PA.

Antenna COA-66089—Vertical antenna equipped with a ground plane. At 72.5 mc it acts as a ¼ wave grounded antenna radiating a vertically polarized wave. Complete with all hardware, fittings, tech manual, etc. Sh. wt. 15 lbs. New $6.95

40 Foot Mast (self supporting) with a top hat antenna. Consists of 8-5½ ft. aluminum 1¾" O. D. sections. Includes base support, guy wires, RG-8/U cables, hardware, tech manual, new, complete, nothing else to buy. Sh. wt. 40 lbs. . . . special $29.95
F.O.B. New York

25 foot collapsible mast tapered anodized aluminum. Operation difficult to describe, but, telescoping action drops a section down and upper sections ride up on stainless steel cables. Nylon rope then permits towering to desired height. Completely self-contained—we've sold a lot of these. Sh. wt. 30 lbs. New $9.95

23 foot mast (climb-up type). 4 five foot sections plus one three foot section which is mounted on base with Universal joint 3½" OD aluminum with some guy wires, stakes, ground rods, connecting bolts. Will support any weight, rotor and beam. New, sh. wt. 100 lbs. $39.95

National "S" Meter. Calibrated S units 40 db over. Illuminated 2½" rd. New $3.49

REX
RADIO SUPPLY COMPANY
84 Cortlandt Street
New York 7, N. Y.

negligible in practice.

The reason I used a detector frequency overlapping into the broadcast band is simple. Just put a jumper from antenna to convertor collector (or any similar feed-through arrangement) and you have a Conelrad check receiver. The usual considerations are involved in picking the best detector frequency; the lower the frequency the better the selectivity; the higher the detector frequency the higher the image rejection. At higher frequencies a higher detector frequency should be used for image rejection and the image frequency should not fall within or near the band being used.

Afterthought

I would like to suggest that transceiver operation be tried by using the backwards converted signal, which is quite weak, (the detector oscillation frequency plus (or minus) the converter crystal frequency) to drive an r.f. output stage (buffer would likely be necessary). With c.w., since one must off-tune the detector to get a beat note, the signal thus generated would be slightly off the received frequency. This can be remedied by having a small capacitor, variable or not, which would be switched in while zero-beating the signal and transmitting and then switched out to receive. I hope this article will serve as an inspiration for those interested in building, small high-performance gear. ■

Product Detector [*from page 51*]

The physical work involved in this additional modification is not so difficult to do. The b.f.o. can is disconnected and removed from the chassis. Its contents are taken out and the b.f.o. tuning capacitor C_1 is discarded and replaced by switch S_2, a Grayhill Type 5-002-3. This is a miniature switch and it is the only type known which is small enough to fit in the space allotted. By arranging the leads and components in the can, the three FT-241-A crystals may be fitted in also. It is a tight fit, but it can be done. The connections are carefully soldered to the tips of the crystal holder pins.

The circuit is arranged so that one crystal, selected by the 2 pole 3 position switch, is placed in series with the lead from the grid of the 6BE6. The crystal then determines the oscillating frequency of the 6BE6, with the coil providing the necessary feedback. Removal of the b.f.o. tuning capacitor is compensated for by slight adjustment of the core of the coil to give the strongest and most stable oscillation as crystals are switched. The crystals would not oscillate alone in the grid circuit without the coil to provide feedback. The b.f.o. can is replaced in the set, and the former b.f.o. pitch control now becomes the sideband selector switch for the product detector.

Operation

The crystal controlled product detector provides excellent frequency stability for single sideband reception. I can tune to the BBC or other transmissions of high stability, receiving them with the product detector in the sideband manner, and the 51J-2 is "stable as a rock," providing long-term undistorted reception, even of music, in this manner. The ability to tune the b.f.o. portion of the product detector is not missed at all. Switching from one sideband to the other is done with a flick of the wrist. In a double conversion receiver such as this one, it is not possible to label the switch positions "UPPER" or "LOWER," as their relative right or left hand positions change as frequency bands are switched, due to the h.f. and i.f. conversion system used in the set. However, this is no handicap, as one easily remembers the proper setting for upper or lower sideband on the various amateur bands. In a single-conversion set, such as the Super-Pro for example, the h.f. oscillator is on the same side of the incoming signal frequency on all bands, and labelling of the switch position as "UPPER" and "LOWER" is possible.[1]

These modifications may easily be adapted to almost any model receiver, by proper choice of crystal frequencies to bracket the set's i.f. frequency with a spread of about 2.8 or 3.0 kc between upper and lower sideband crystals. I shall be only too happy to correspond with readers who may wish to try this product detector scheme, and to furnish such suggestions and assistance as may be possible. ■

[1]Lee, Paul H., "Save your Super Pro for Sideband", *CQ* September 1958, page 52.

YL [*from page 97*]

land, where his dad is with the USAF. Since he can do no operating Keith has taken up publishing "The Novice Amateur," a bulletin published monthly and devoted to the Novice. Departments include Skeds, News, QRV (DX stations heard in Novice band), Ham of the Month, Club of the Month, etc. Rates are $2 in U.S. and $2.50 foreign. Of the many Hams expressing interest in the Novice Amateur, none was a YL, and Keith would like to hear from some of the Novice YLs. Address him at 7500 Abron, APO 125, New York, N.Y.

YL VHF Contest

Remember the dates of the first YL VHF Contest—April 12-13, 1961. Complete rules were published in March *CQ*.

CQ YL

DX YLs, DX chasers, VHF enthusiasts, emergency work, young YLs, all of the subjects, mentioned here, and many many more—in fact, every facet of Ham radio in which the YLs participate, is covered in the one and only book about the YL's—"CQ YL." 18 chapters over 500 photographs. Order from W5RZJ (QTH at beginning of column), $3, postpaid.

33—W5RZJ

ROHN "fold-over" TOWERS*

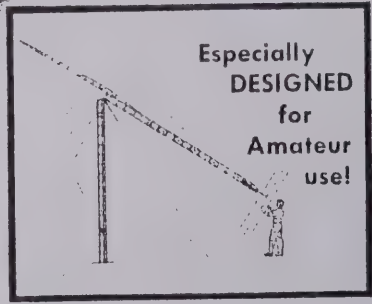
Especially DESIGNED for Amateur use!

first IN DESIGN foremost IN SALES

ROHN "fold-over" towers are ESPECIALLY made for amateur use. They are the most practical tower in design because they allow you to work ON THE GROUND for antenna maintenance and servicing. You'll quickly agree that this is a most wonderful feature for an amateur tower. In addition, these towers are made and designed for true, heavy duty use. They are structurally sturdy for use up to 70 feet and in enough sizes for all types and sizes of amateur antennae. This means that they can easily handle your requirements. They have unexcelled workmanship. They are hot-dipped galvanized after fabrication which means you have no problem of maintenance. They come as a complete package with all materials and accessories included. Add all these wonderful features together and you see why they're the most demanded tower today! Priced from $186.

FREE literature and near source of supply gladly sent.
Be Sure you investigate ROHN towers before buying!

*Patent—2,875,865

ROHN Manufacturing Company
Box 2000 • Peoria, Illinois
"World's largest exclusive manufacturer of TV-Communication towers"
For further information, check number 15, on page 126

COR-MAC CUBICAL QUAD ANTENNAS FOR 2 AND 6 METERS
Will provide greater gain with less elements than Yagi type arrays.
Antenna input impedance will match standard co-axial cable, eliminating need for tricky matching devices that can cause severe power losses.
Broad tuning provides low standing wave ratios over entire band.
Large capture area, low angle of radiation and some efficiency for 90 degree cross polarized signal transmission and reception.
Complete kits, less element wire, requiring only screw driver and pliers for assembly. All machined aluminum construction with exception of 6 meter wood dowel spreaders.
2 meter, 2 element portable quad with element wire @ $12.50 Post Paid.
CUSTOM BUILT 2 AND 6 METER QUADS
1 element 2 @ $19.50, 3 element 2 @ $24.50, 2 element 6 @ $18.50, 3 element 6 @ $24.50, 1 element 6 @ $29.50.
All prices F.O.B., Warehouse on custom antennas
J. C. MacELROY CO., INC.
74 Trinity Place, N. Y. 6, N. Y.

51J-/R-388 Band 1 Mod and AGC Mod...By Dallas Lankford

903 Sherwood
Ruston, LA
71270

In my article, "Collins 51J-4 Review," DX News 56, 1 (Mon., Oct. 3, 1988), pages 6-8, I mentioned that the Collins 51J- series and R-388 receivers were insensitive on band 1, and suggested a band 1 mod and AGC bias mod to improve band 1 sensitivity. However, in a subsequent article, "Collins 51J-4 Technical Notes," DX News 56, 13 (Mon., Dec. 26, 1988), pages 29-32, I recommended against those mods after I discovered they degraded dynamic range on all bands.

Recently, I took another look at the band 1 sensitivity issue. Previously I had remarked that a carefully aligned 51J-/R-388 series receiver is not seriously insensitive on band 1, but merely somewhat less sensitive than on the other bands. Specifically, typical sensitivity is 0.25 microvolts on bands 2-30 and 1.0 microvolt on band 1 (for a 10 dB S+N/N ratio and 6 KHz bandwidth). I knew that improving band 1 sensitivity slightly on band 1 would not make it possible to hear more and better DX. Nevertheless, uniform sensitivity is desirable because it simplifies optimization of antennas, which is an important factor in determining what DX you hear. Also, I was curious if band 1 sensitivity could be made about the same as for the other bands without degrading band 1 dynamic range. The solution turned out to be simple. Add a 10 pF 500 volt mica capacitor across C117; see the simplified schematic in Fig. 1.

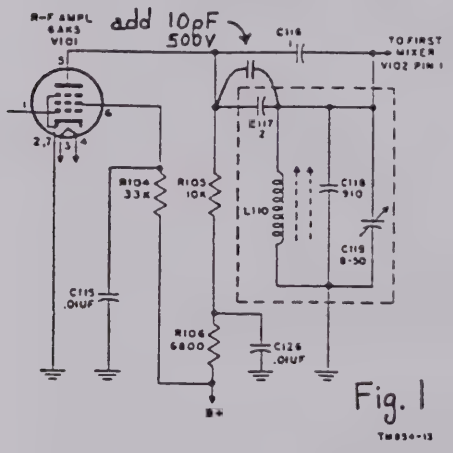

Fig. 1

The simplified schematic in Fig. 1 is taken from an R-388 manual, but applies to all 51J- series receivers. The dashed line enclosing C117, L110, C118, and C119 is not accurate because those components are not contained in a shielded enclosure. In particular, C117 is attached to solder lugs on adjacent bandswitch wafers. It is not easy to access C117 because of its position beside an L bracket and because of two insulated wires which pass through one bandswitch wafer and are soldered to lugs on the other bandswitch wafer above one end of C117. These two wires must be unsoldered, disconnected, and pushed out of the way to access one end of C117.

The dynamic range before and after this mod was the same - 73 dB (5 KHz spacing), which is 4 dB better than an NRD-525. Sensitivity was improved to 0.35 microvolts, which is almost the same as for band 2.

After using a 51J-4 for almost 2 years I must say that it has extremely poor AGC for such an otherwise fine receiver. The AGC suffers from the worst kinds of defects one could imagine - low frequency audio on the AGC line, which causes noticable audio distortion on very low frequency audio (below 100 Hz), and attack and release times which are not suitable for MW graveyard and SW DXing. Fortunately, there is a simple cure for both of these problems (if you don't care about SSB or CW). Add a 1 mF 250 volt capacitor across C205B; see the schematic fragment in Fig. 2. In the original circuit, the release time is determined by R144 and C205B according to the formula T = RC, where R is in ohms and C is Farads (the result T is in seconds). Thus, the original release time is about 50 milliseconds. Adding a 1 mF capacitor across C205B increases the release time to about 550 milliseconds, which is satisfactory for MW and SW AM broadcasts. This mod does slow the attack time from about 5 milliseconds to about 50 milliseconds, which makes the receiver less suitable for SSB and CW. If you want both improved AM and SSB/CW AGC performance, you will need to do my fast attack and slow release AGC mod. Send me an SASE for details of this more elaborate mod.

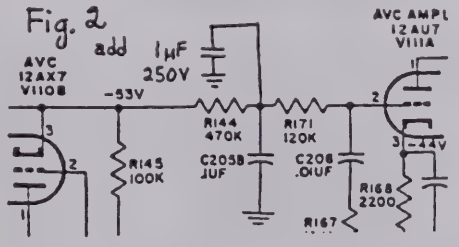

Fig. 2

copyright June 1990

+++ For a current Reprint List & Catalog, send US$1.00 to: NRC Publications, Box 164, Mannsville, NY 13661+++

Section III. LUBRICATION AND WEATHERPROOFING

30. Lubrication Instructions

a. It is only necessary to cover the tuning gear train teeth cam edges and slug table riders with a light grease film of AN–G–25 viscosity.

b. Gasoline will not be used as a cleaning fluid for any purpose.

c. Remove old grease with lint-free cloth moistened with carbon tetrachloride or solvent (SD).

d. Wipe with dry cloth and apply lubricant.

31. Weatherproofing

a. General. Signal Corps equipment, when operated under severe climatic conditions, such as prevail in tropical, arctic, and desert regions, requires special treatment and maintenance. Fungus growth, insects, dust, corrosion, salt spray, excessive moisture, and extreme temperatures are harmful to most materials.

b. Tropical Maintenance. A special moisture-proofing and fungiproofing treatment has been devised which, if properly applied, provides a reasonable degree of protection. This treatment is explained in TB SIG 13 and TB SIG 72.

c. Winter Maintenance. Special precautions necessary to prevent poor performance or total operational failure of equipment in extremely low temperatures are explained in TB SIG 66 and TB SIG 219.

d. Desert Maintenance. Special precautions necessary to prevent equipment failure in areas subject to extremely high temperatures, low humidity, and excessive sand and dust are explained in TB SIG 75

e. Lubrication. The effects of extreme cold and heat on materials and lubricants are explained in TB SIG 69. Observe all precautions outlined in TB SIG 69, and pay strict attention to all lubrication orders when operating equipment under conditions of extreme cold or heat. Refer to section III of this chapter for detailed instructions.

32. Rustproofing and Painting

a. When the finish on the front panel has been badly scarred or damaged, rust and corrosion can be prevented by touching up bared surfaces. Use No. 00 or No. 000 sandpaper to clean the surface down to the bare metal; obtain a smooth bright finish.

Caution: Do not use steel wool. Minute particles frequently enter the equipment and cause short circuits.

b. To touch-up, apply paint with a small brush. When numerous scars and scratches warrant a complete repainting of the front panel, remove all knobs, mask the shafts, jacks, dials, meter, and trim, and spray-paint the entire panel. Remove rust spots, before painting, by cleaning the corroded metal with solvent (SD). In severe cases it may be necessary to use solvent (SD) to soften the rust and to use sandpaper to prepare the spot for painting. Paint used will be authorized and consistent with existing regulations.

Section IV. TROUBLE SHOOTING AT ORGANIZATIONAL MAINTENANCE LEVEL

33. General

The trouble shooting and repair work that can be performed at the organizational maintenance level (operators and repairmen) is necessarily limited in scope by the tools, test equipment, and replaceable parts issued, and by the existing tactical situation. Accordingly, trouble shooting is based on the performance of the equipment and the use of the senses in determining which part is at fault.

34. Visual Inspection

a. Failure of this equipment to operate properly will usually be caused by one or more of the following faults.

(1) Burned-out fuse.

(2) Defective tube.

(3) Faulty antenna connections.

(4) Faulty loudspeaker or phone connections.

(5) Antenna or lead-in grounded.
(6) Defective plug and cord.
(7) Line voltage low or not applied.
(8) Corrosion or excessive accumulation of dirt in the set.
(9) Break-in relay burned out.
(10) Dial knobs loose.

b. When failures are encountered and the cause is not immediately apparent, check as many of the above items as it practicable before starting a detailed examination of the receiver components. If possible, obtain information from the operator of the equipment regarding performance at the time the trouble occurred.

35. Trouble Shooting, Using Equipment Performance Checklist

a. General. The equipment performance checklist will help the operator locate trouble in the equipment. This list indicates the item to be checked, the normal indications of correct operation, and the corrective measures the operator can take. To use the list, follow the items in numerical sequence.

b. Action or Condition. For some items, the information given in the action or condition column consists of various switch and control settings under which the item is to be checked. For other items it represents an action that must be taken to check the normal conditions given in the normal indications column.

c. Normal Indications. The normal indications listed include the visible and audible signs that the operator should perceive when he checks the items. If the indications are not normal, the operator should apply the recommended corrective measures.

d. Corrective Measures. The corrective measures listed are those the operator can make without turning in the equipment for repairs. A reference in the table below to chapter 5 indicates that the trouble cannot be corrected during operation and that trouble shooting must be done by the higher echelons. This would be a normal procedure. However, if the tactical situation requires that communication be maintained, and if the set is not completely disabled, the operator must maintain the set in operation as long as it is possible to do so.

36. Equipment Performance Checklist

	Item No.	Item	Action or condition	Normal indications	Corrective measures
PREPARATORY	1	Antenna	Lead-in wire connected.		
	2	Loudspeaker	Speaker cords connected to AUDIO terminals at rear of set.		
	3	Phones	Inserted securely in PHONES jack.		
	4	Dual diversity converter	Lead-in inserted securely in IF OUTPUT jack.		
	5	Line cord	Line cord plug inserted into socket of 110-volt 50-60-cycle a-c source.		
	6	CRYSTAL FILTER SELECTIVITY control	Set at zero position.		
	7	LIMITER OFF-ON switch	Rotate to OFF.		
	8	AVC OFF-ON control	Set at ON.		
	9	FR GAIN control	Set at 10.		
	10	BFO OFF-ON control	Turn to OFF.		
	11	AUDIO GAIN control	Set at 7.		
	12	CALIBRATE OFF-ON switch	Turn to OFF.		

	Item No.	Item	Action or condition	Normal indications	Corrective measures
START	13	OFF-STANDBY-ON switch	Turn to ON	Dial lamp lights	Check fuse F101 at rear of set. If blown, try to determine cause by visual inspection before inserting new fuse. Check line cord and power source.
				Rushing noise is heard at output	Check tubes first by feeling. Look for tube too hot or cold. Tap tube lightly and listen for pop which indicates defect. Replace tube with one known to be in good condition. Check speaker and connections. Look for short or ground if speaker is remotely operated.
EQUIPMENT PERFORMANCE	14	KILOCYCLES dial knob	Set BAND CHANGE switch at any desired position. Tune across entire band by rotating KILOCYCLES dial knob.	Receiver tracking on signals. Meter in input position fluctuates with varying signal strength	If normal signals are heard, but meter shows no reaction, trouble shooting is necessary. If no signals or weak signals are heard check antenna for firm connections. Check shield for fraying that might ground antenna. Check soldered connections for corrosion or high resistance. Check ground along antenna. Vary ANT. TRIM control for optimum reception.
	15	BAND CHANGE switch	Check each of the tuning steps. Use procedures outlined in item 14 above.		
	16	PHONES jack	Insert phones plug into jack	Signals are audible	Check phones, cord and plug. Check for tight fit in jack.
	17	RF GAIN control	With set tuned to a particular station, rotate control	Strength of signal increases then decreases	Refer to paragraphs 74–79.
	18	AUDIO GAIN control	Rotate control	Volume changes proportionally	Do.
	19	AVC OFF-ON switch	Turn to ON	Signal level stabilizes. Meter becomes insensitive	Do.
	20	CRYSTAL FILTER SELECTIVITY switch	Rotate switch through positions 1, 2, 3, 4	Tuning becomes progressively sharper.	Do.
	21	CRYSTAL FILTER PHASING control	Rotate control in arc about centering index	Undesirable heterodynes should be tuned out	Do.
	22	LIMITER OFF-ON switch	Turn switch to ON. Tune to station on one of the lower bands.	Noise peaks are reduced	Do.

	Item No.	Item	Action or condition	Normal indications	Corrective measures
EQUIPMENT PERFORMANCE	23	BFO OFF-ON switch	Turn switch to ON and tune in a c-w station on one of the higher bands	Beat-frequency signal is heard at output	Check BFO tube V114. Refer to paragraphs 74–79.
	24	BFO PITCH control	With BFO OFF-ON switch ON, rotate BFO PITCH control	A change in audio pitch is noted at output	Refer to paragraphs 74–79.
	25	ANT. TRIM control	Rotate control in small arc	As optimum match is met, signal increases	Do.
	26	CALIBRATE OFF-ON oscillator switch	Turn to ON. Turn BFO OFF-ON switch ON. Rotate main tuning dial through 1-mc.	Audio beat note is heard at every 100 kc	Do.

1st mixer

Band 5 (odd) 4.5 - 5.5 — 3.5 - 2.5

XTAL 8.0 mhz

Band 6 (even) 5.5 - 6.5 — 2.5 - 1.5

8.0 XTAL

CHAPTER 4

THEORY OF OPERATION

Section I. ELECTRICAL THEORY OF RECEIVER

37. General

a. Although Radio Receiver R–388/URR uses the basic superheterodyne principle, it differs from the conventional types: It uses single, double, or triple conversion (mixing) when tuning over the entire frequency spectrum of .5 to 30.5 mc.

b. The tuning range is divided into thirty 1-mc steps by a system of switches and coils in the r-f amplifier, first mixer, crystal oscillator, and variable i-f circuits. Band changing 1-mc steps consists of moving powdered iron *slugs* into selected coils changing the L-C (inductance-capacitance) ratio of the tank circuits by varying the inductances, thus changing the resulting resonant frequencies. Fine tuning is then attained by a cam arrangement controlling the precise position of the powdered iron slugs suspended from a common shaft (pars. 57 and 58). By changing coils and repeating the slug tuning procedure, a highly selective and stable system is attained.

c. When an incoming signal on bands 4 to 30 (3.5- to 30.5-mc) is mixed with the predetermined frequency of the crystal oscillator, V105, the first mixer output frequency (fig. 12) will always be either in the 2.5- to 1.5- or the 3.5- to 2.5-mc range, depending on the variable i-f switch which selects the 2.5- to 1.5-mc pass for the even-numbered bands and the 3.5- to 2.5-mc pass for the odd-numbered bands. The signal then is fed to the second mixer, V106, and beat with a calibrated variable-frequency oscillator signal (V001, V002) to produce an i-f output frequency of 500 kc. This 500-kc output then is fed through a crystal filtering network, Y112. From then on the equipment follows a conventional pattern, with three stages of i-f amplification (V107, V108, and V109); an avc detector section, V110; beat-frequency oscillator V114; avc amplifier and i-f output V111; noise limited and a-f voltage amplifier V112; and audio power amplifier V113 sections (fig. 11).

d. The only exceptions to the procedures as outlined above are tuning steps 1, 2, and 3. Tuning step 1 uses an intermediate mixer, V103, between the first and second mixers as described above. The 4-mc crystal selected by switch S109 (fig. 42) will produce a crystal oscillator (V105) output signal of 12 mc (third harmonic) for the first mixer. The first mixer, V102, output to the intermediate mixer, V103, then will be in the order of 11.5 mc to 10.5 mc. At the same time, by means of split plate-tank-coil tuning, crystal oscillator V105 also will feed to the intermediate mixer, an 8-mc signal (second harmonic of 4 mc) which, when beat with the 11.5-mc to 10.5-mc input signal will cause the intermediate mixer to produce a signal in the 3.5- to 2.5-mc range. This signal then is applied to the second mixer, V106, where it is beat with the 3- to 2-mc output of the vfo (variable-frequency oscillator) to obtain an intermediate frequency of 500 kc (fig. 11). Since bands 2 and 3 correspond to the input frequencies of the second mixer (2.5- to 1.5- and 3.5- to 2.5-mc), incoming signals on these bands are fed directly from the r-f amplifier to the second mixer, V106.

e. The power supply uses a conventional full-

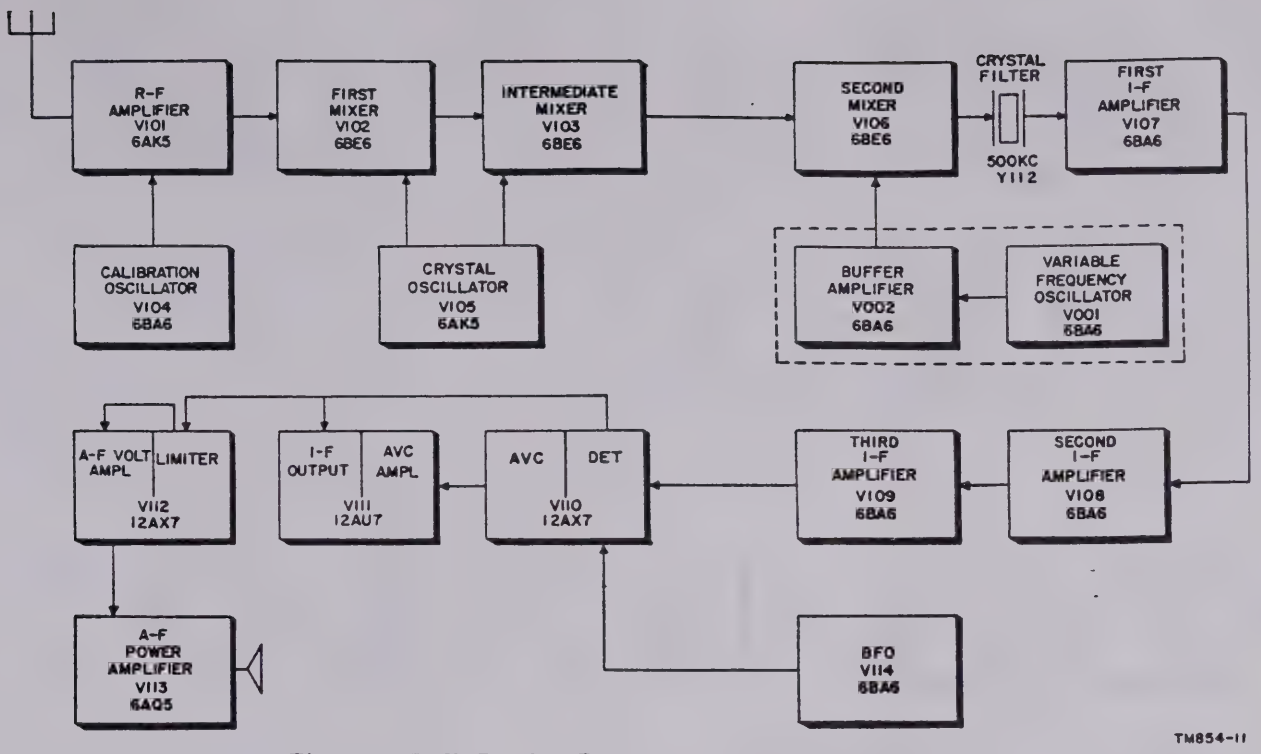

Figure 11. Radio Receiver R–388/URR, over-all block diagram.

wave high-vacuum rectifier, V115, for 115-volt operation, with a two-section choke input filter.

f. The equipment uses 18 tubes, 3 of which are dual-triodes. Their functions are discussed in the following circuit descriptions.

38. Radio-frequency Amplifier V101

The r-f amplifier stage uses a type 6AK5 miniature pentode, V101, the output of which is coupled into either the first or second mixer stage, depending on the position of the BAND CHANGE switch. In tuning step 1, the receiver uses triple conversion and the r-f amplifier output feeds into the grid circuit of the first mixer. In tuning steps 4 through 30, the amplifier output is also fed into the first mixer, and the receiver uses double conversion. In tuning steps 2 and 3, the amplifier feeds into the grid circuit of the second mixer and the receiver uses single conversion.

a. Tuning Step 1. With the BAND CHANGE switch at tuning step 1 (.5 to 1.5 mc), the following action takes place in the r-f amplifier (fig. 13). The incoming signal at ANTENNA jack J101 is applied to the grid circuit through capacitor C233 which, with ANT. TRIM variable capacitor C230, forms the antenna matching network. The r-f amplifier grid circuit is tuned to resonance with the signal by permeability-tuned inductance L101. Trimmer capacitor C102 is adjusted to improve the response at the h-f (high-frequency) end. Capacitor C101 is large (820 $\mu\mu$f) so that the effect of tube input capacitance changes (Miller effect) in frequency will be negligible. The tuned r-f signal is then fed through capacitor C113 to the control grid, pin 1, of V101. Resistors R101 and R102 are the grid and decoupling resistors, respectively. Capacitor C114 provides the interstage avc (automatic volume control) decoupling. Capacitor C111 couples calibration oscillator tube V104 output to the grid of V101. The cathode and suppressor grids of tube V101 are grounded. The screen grid, pin 6, potential is determined by dropping resistor R104. Resistor R104, in conjunction with capacitor C115 forms the screen decoupling network. The r-f amplifier output is impedance-coupled to the grid of the first mixer tube, V102, by resistor R105, capacitor C117, and permeability-tuned inductor L110. Resistor R105 is the r-f ampli-

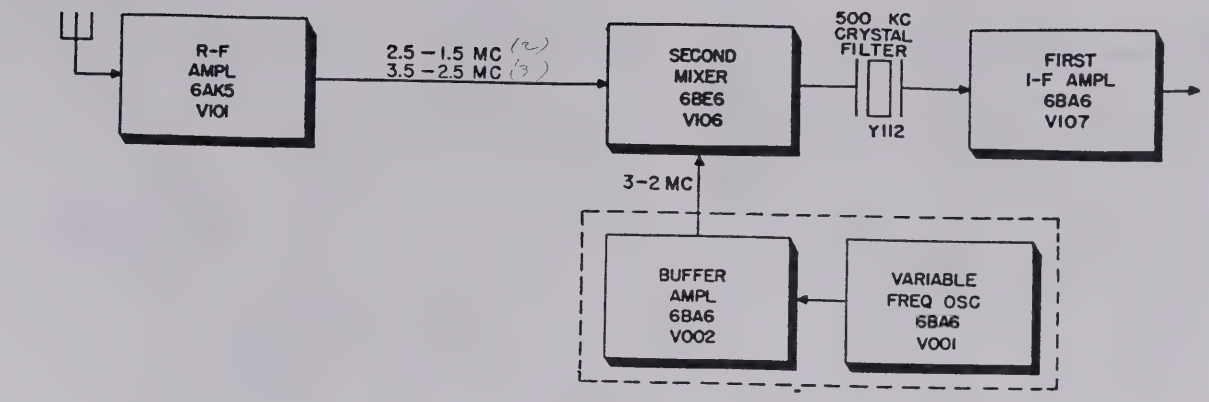

BLOCK DIAGRAM BANDS 2-3

1.5 thru 3.5 Mc

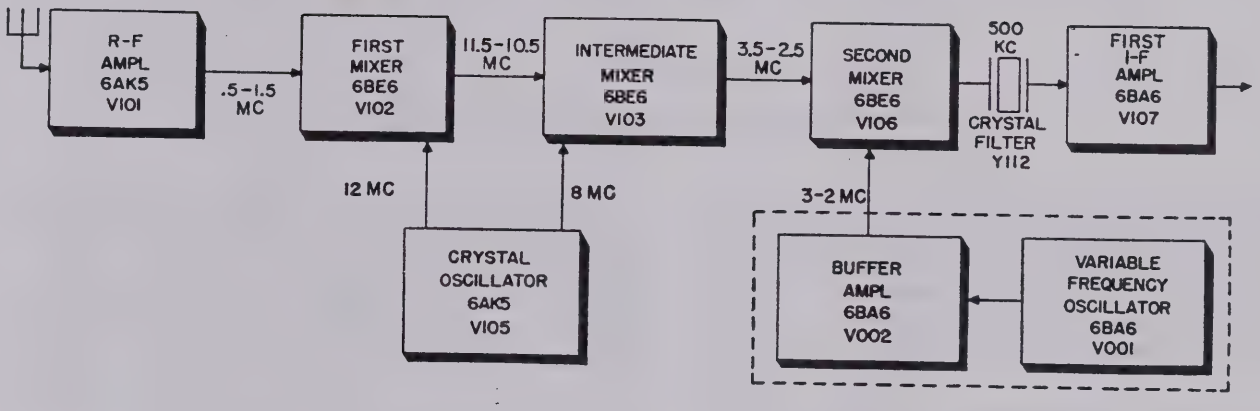

BLOCK DIAGRAM BAND 1 (.5 – 1.5 Mc)

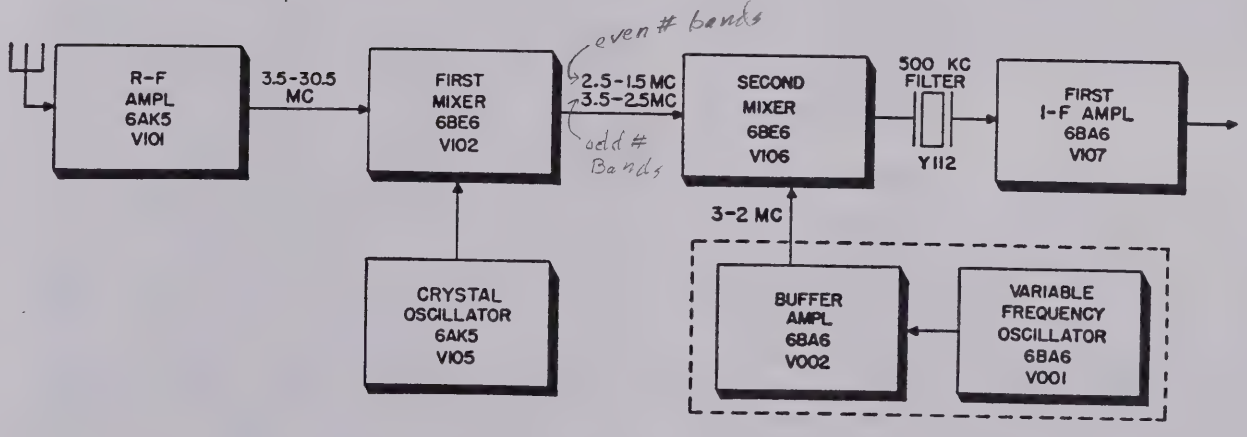

BLOCK DIAGRAM BANDS 4-30

3.5 Mc – 30.5 Mc

TM854-12

Figure 12. Radio Receiver R–388/URR, significant block diagrams of bands.

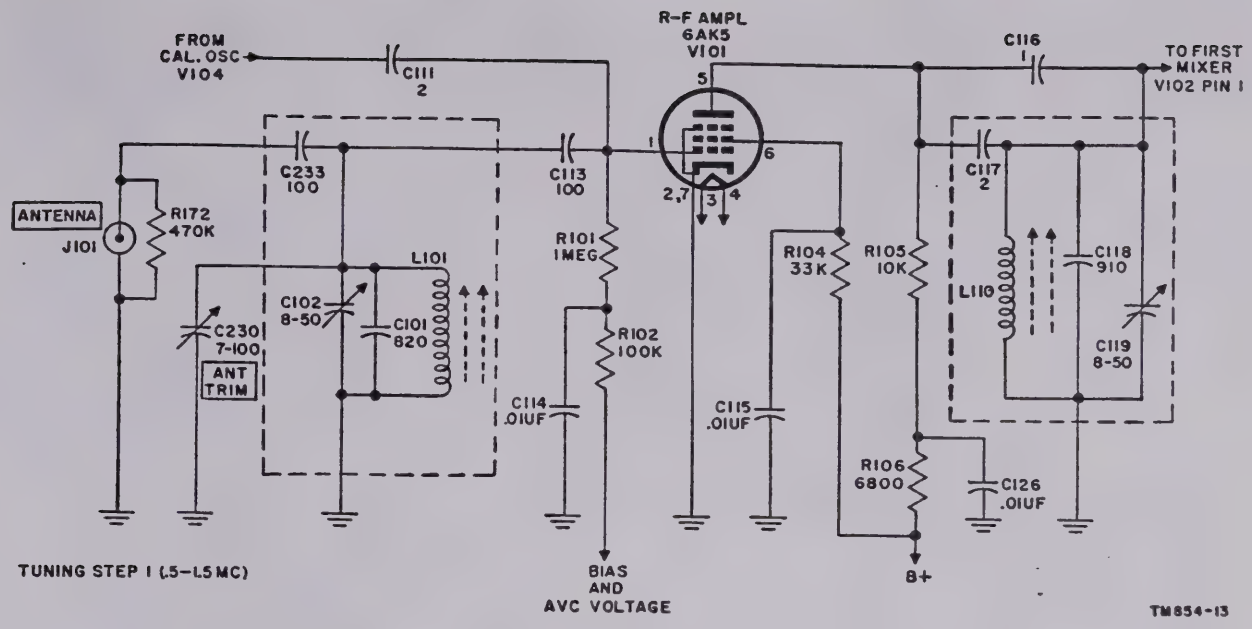

Figure 13. R-f amplifier, tuning step 1, schematic diagram.

fier tube V101 plate load. Capacitor and resistor R106 form the tube V101 plate decoupling network. Capacitor C118 is used for coarse tuning the resonant circuit and trimmer. Capacitor C119 is the alinement trimmer for inductor L110. Capacitors C116 and C117 are the interstage coupling capacitors.

b. Tuning Step 2. Figures 14 and 42 show the circuit components of the r-f amplifier when tuned to step 2 (2.5 to 1.5 mc). The function of the grid circuit is essentially the same as that for tuning step 1, with the exception that antenna coupling capacitor C234 is cut into the circuit by switch S102 (fig. 42) while switch S103 (fig. 42) cuts in the grid tank composed of capacitors C104 and C103 and inductor L102 (par. 55). The plate circuit is tuned by permeability-tuned inductor L116, band-setting trimmers C175 and C177; alinement trimmer C174 provides the vernier tuning of the tank. Capacitor C220 provides the interstage coupling. Permeability-tuned inductor L118 in conjunction with band-setting trimmers C181, C179, and alinement trimmer C180 forms the tuned grid circuit for the second mixer, V106.

c. Tuning Step 3. The r-f amplifier functions in the same manner for tuning step 3 (3.5 to 2.5 mc) as explained for tuning step 2 with the exception of the change in tuning components for the grid and plate circuit (fig. 14). In tuning step 3, as with all the odd-numbered tuning steps, permeability-tuned inductors L116 and L118 are shunted with trimmer inductors L117 and L119 to lower the tuned frequency. Refer to paragraph 55 for band-switch information.

d. Tuning Steps 4 Through 30. The r-f amplifier grid and plate tuning components for tuning steps 4 through 7 (3.5 to 7.5 mc), tuning steps 8 through 15 (7.5 to 15.5 mc), and tuning steps 16 through 30 (15.5 to 30.5 mc) are shown in figure 15.

39. First Mixer

The purpose of the first mixer, V102 (a pentagrid converter tube, type 6BE6), is to mix electronically the amplified r-f output of tube V101 on all tuning steps (except 2 and 3) with the output of the crystal oscillator tube, V105, type 6AK5. The first mixer output frequency will always be either in the 2.5- to 1.5-mc range or in the 3.5- to 2.5-mc range, depending on whether the tuning steps are even-numbered or odd-numbered, respectively. In tuning step 1, the first mixer output is applied to the input side of the intermediate mixer, and in tuning steps 4 through 30 the first mixer output is applied to the input side of the second mixer

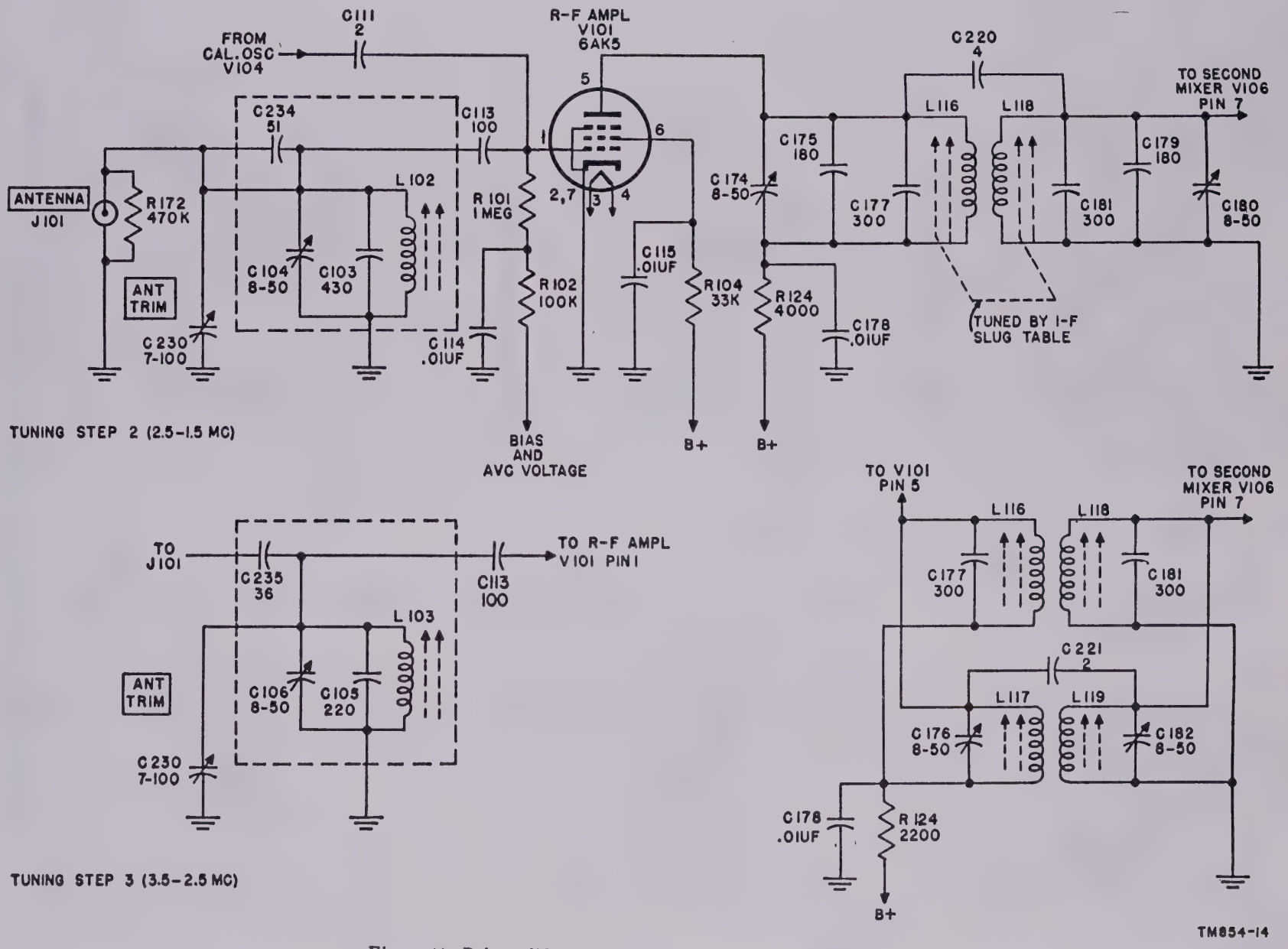

Figure 14. R-f amplifier, tuning steps 2 and 3, schematic diagram.

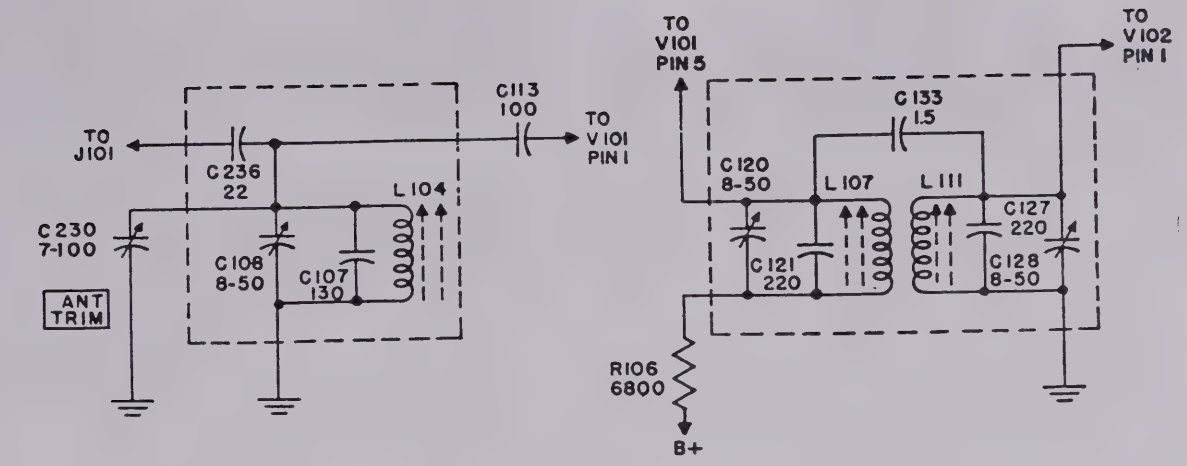

TUNING STEPS 4 THROUGH 7 (3.5–7.5 MC)

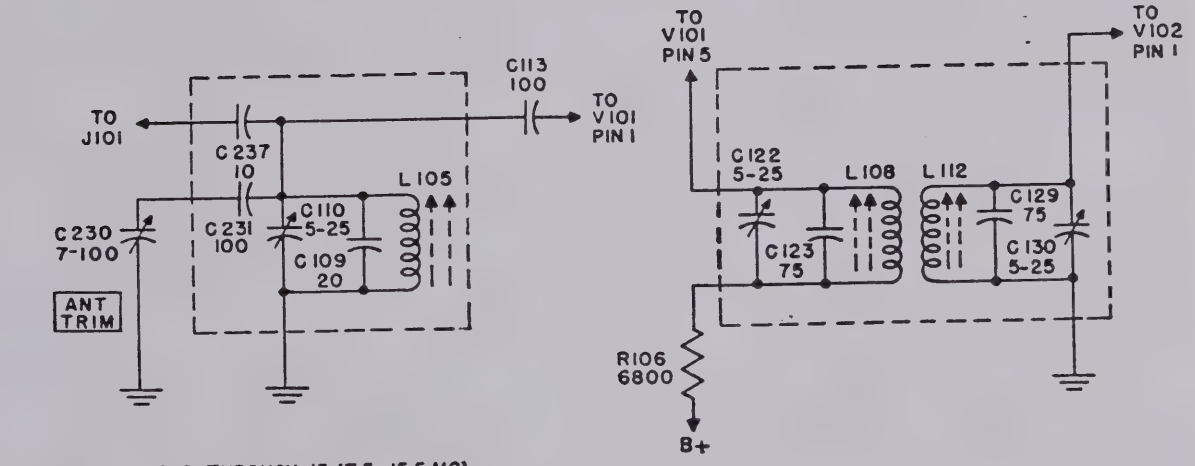

TUNING STEPS 8 THROUGH 15 (7.5–15.5 MC)

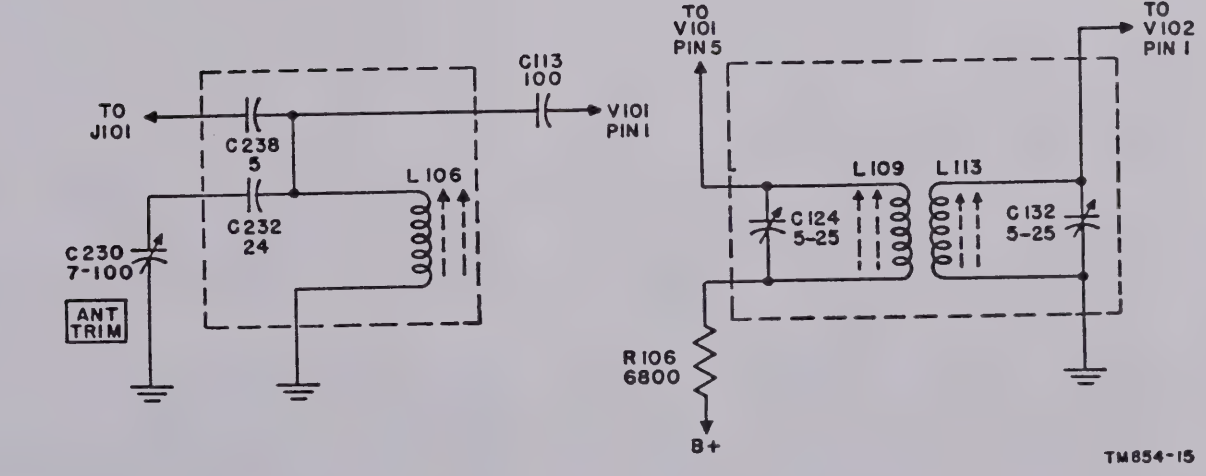

TUNING STEPS 16 THROUGH 30 (15.5–30.5 MC)

Figure 15. R-f amplifier, tuning steps 4 through 30, schematic diagram.

(fig. 12). The first mixer is not used in tuning steps 2 and 3. Table II shows the grid and plate components of the first mixer circuit for the different tuning steps.

a. Tuning Step 1 (.5 to 1.5 MC). In tuning step 1 (fig. 16), the signal voltage is heterodyned with a 12-mc signal from the crystal oscillator, V105, so that the usable output of the mixer will be between 11.5 to 10.5 mc. Capacitor C116 couples the output of r-f amplifier V101 to the grid (pin 1) of the first mixer tube, V102. The mixer grid r-f circuit consists of permeability-tuned inductor L110, fixed trimmer capacitor C118, and alinement trimmer capacitor C119. The .5- to 1.5-mc signal is applied to what is normally called the oscillator grid and the 12-mc oscillator signal from the crystal oscillator, V105, is applied to the control grid (pin 7) of the first mixer tube, V102. The 12-mc oscillator signal is applied through capacitor C136 and across the grid resistor R108 which is connected between pin 7 grid and ground. Electronic mixing of the two injected voltages results in the usual sum, difference, and original voltages being produced and present in the plate current stream. The difference voltage (11.5 to 10.5 mc) r-f signal is selected by the tuned circuit in the mixer plate circuit for application to the succeeding stage, the intermediate mixer, V103. The signal voltage is developed across the plate load inductor, L114, which is permeability-tuned as part of the ganged slug racks. The developed r-f voltage is impedance-coupled into the intermediate mixer stage, through capacitor C137 to inductor L115 which is the grid coil for the intermediate mixer. The plate circuit of the first mixer, V102, is decoupled from the power supply by resistor R110 and capacitor C138. The first mixer uses cathode bias, which is developed by cathode current flow through bias resistor R107. Capacitor C134 is the cathode bypass capacitor. The screen voltage is supplied through voltage-dropping resistor R109 which is bypassed by capacitor C135.

b. Tuning Steps 4 Through 30 (3.5 to 30.5 MC). The first mixer circuit for tuning steps 4 through 30 is shown in figure 17. The circuit is the same as for tuning step 1, except that the grid and plate tuning components change through the various frequency ranges and the output of the first mixer is fed to the input side of the second mixer, V106, instead of to the intermediate mixer, V103. Figure 15 shows the grid tuning components for the first mixer, V102. Capacitor C116 (fig. 17) is connected from the plate of V101 to the grid (pin 1) of first mixer V102 and provides the r-f coupling to the grid coils. Capacitor C133 parallels capacitor C116 in tuning steps 4 through 7 (the lower frequency tuning steps), where increased capacitive coupling is required. The output of the first mixer will be in the range of 2.5 to 1.5 mc on the even-numbered tuning steps, and 3.5 to 2.5 mc on the odd-numbered tuning steps. Inductor L116 tunes the plate circuit to the i-f frequency on the even-numbered tuning steps. On the odd-numbered tuning steps, inductor L116 is shunted by L117 to enable tuning to a higher i-f frequency. Only inductor L116 is tuned by the slug rack. Capacitors C177 and C175 are fixed trimmers. Trimmer capacitor C174 is used for alinement. Signals are transferred from the plate load inductance of the first mixer to the grid circuit of the second mixer, V106, by impedance coupling through capacitors C220 and C221. The grid circuit of the second mixer is tuned by inductor L118 on the even-numbered tuning steps, and by inductor L118 shunted by L119 on the odd-numbered tuning steps. Plate circuit decoupling for the first mixer, V102, is provided by resistor R124 and capacitor C178.

40. Intermediate Mixer
(fig. 18)

The intermediate mixer, V103, tube type 6BE6, operates only on tuning step 1. Its purpose is to beat a signal from the first mixer in the range of 11.5 to 10.5 mc with the 8-mc signal from the h-f oscillator, V105, so that a signal will be fed to the second mixer V106 in the range of 3.5 to 2.5 mc. The r-f signal across permeability-tuned inductor L114 in the plate circuit of the first mixer, V102, is impedance-coupled to inductor L115 in the intermediate mixer grid circuit (fig. 18). Capacitor C137 provides the coupling, and capacitor C138 is the plate bypass to ground for the first mixer. Trimmer capacitors C139 and C140, in con-

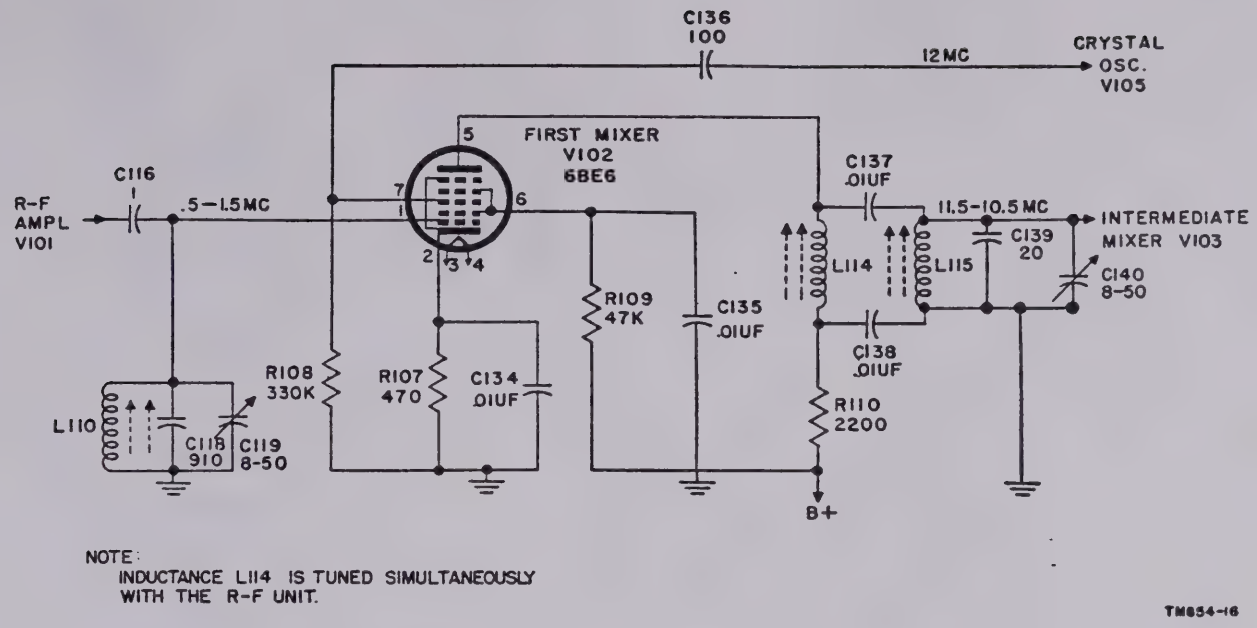

Figure 16. First mixer, tuning step 1 only, schematic diagram.

junction with inductor L115, form the grid tank circuit of V103. The signal impressed on the control grid (pin 7) of V103 is beat with the crystal oscillator (V105) frequency, introduced at injection grid (pin 1), through capacitor C143. Resistor R112 is the injection grid resistor. Resistor R111 provides the cathode bias; capacitor C141 is the cathode bypass to ground. The operating voltage of the screen grid (pin 6) is determined by dropping resistor R113. Capacitor C142 is the screen grid r-f bypass. Resistor R124 and capacitor C178 provide the plate circuit decoupling (fig. 18). The output at the plate (pin 5) is fed through a 1,250-kc wave trap consisting of inductor L124 and capacitor C159 and the variable i-f coil section to the second mixer, V106.

41. Variable Intermediate Frequency

The variable intermediate frequency consists of two ranges: one for a frequency of 2.5 to 1.5 mc, and the other for 3.5 to 2.5 mc, used on even-numbered and odd-numbered bands, respectively. Using two variable i-f bands in this manner, cuts in half the number of crystals necessary in the h-f oscillator, since each crystal fundamental frequency, or useful harmonic thereof, is used for two bands. Inductors L116 and L118 are the 2.5- to 1.5-mc coils, and are the coils in which the tuning slugs travel. The 3.5- to 2.5-mc range is obtained by shunting L116 with L117, and L118 with L119 to raise the resonant frequencies of L116 and L118. Tank switch sections S110 and S111 alternately switch in and switch out shunting coils L117 and L119 as the band switch is rotated. Band-setting capacitors C175 and C177 tune inductor L116. Trimmer capacitor C174 facilitates alinement at the h-f end of the coil. Capacitors C179 and C181 are fixed trimmers for variable inductor L118, and C180 is the alinement trimmer. Capacitors C176 and C182 are the alinement trimmers for h-f tuning of L117 and L119, respectively. Capacitors C220 and C221 provide the coupling for coils L116 and L118 and L117 and L119, respectively.

42. Second Mixer

The purpose of second mixer V106 is to mix electronically the i-f signal with the signal from the vfo so that an intermediate frequency of 500 kc will be developed at the second mixer, V106, output. The second mixer stage uses a 6BE6 pentagrid converter type tube. The vfo signal is fed through a shielded cable, across the filter network composed of inductor L125 and capacitor C168 (fig. 19). This network shunts to ground 500-kc noise from the vfo to

avel. The shunting 9 to raise nd L118. lternately oils L117 ed. Band- e inductor ates aline- itors C179 riable in- t trimmer. alinement and L119, C221 pro- L118 and

TM854-16

ERMEDIATE ER V103

AL

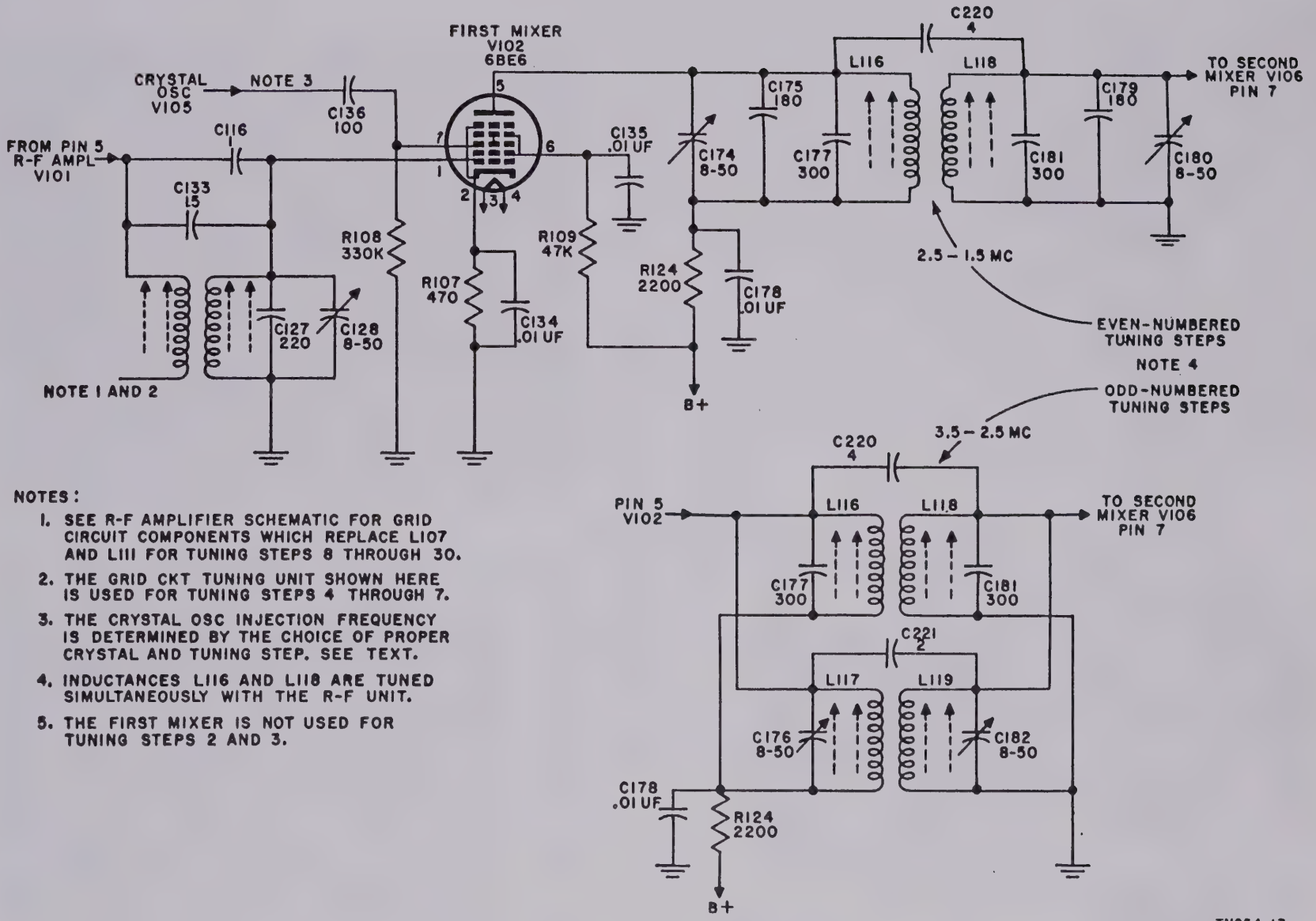

NOTES:

1. SEE R-F AMPLIFIER SCHEMATIC FOR GRID CIRCUIT COMPONENTS WHICH REPLACE L107 AND L111 FOR TUNING STEPS 8 THROUGH 30.
2. THE GRID CKT TUNING UNIT SHOWN HERE IS USED FOR TUNING STEPS 4 THROUGH 7.
3. THE CRYSTAL OSC INJECTION FREQUENCY IS DETERMINED BY THE CHOICE OF PROPER CRYSTAL AND TUNING STEP. SEE TEXT.
4. INDUCTANCES L116 AND L118 ARE TUNED SIMULTANEOUSLY WITH THE R-F UNIT.
5. THE FIRST MIXER IS NOT USED FOR TUNING STEPS 2 AND 3.

TM854-17

Figure 17. First mixer, tuning steps 4 through 30, schematic diagram.

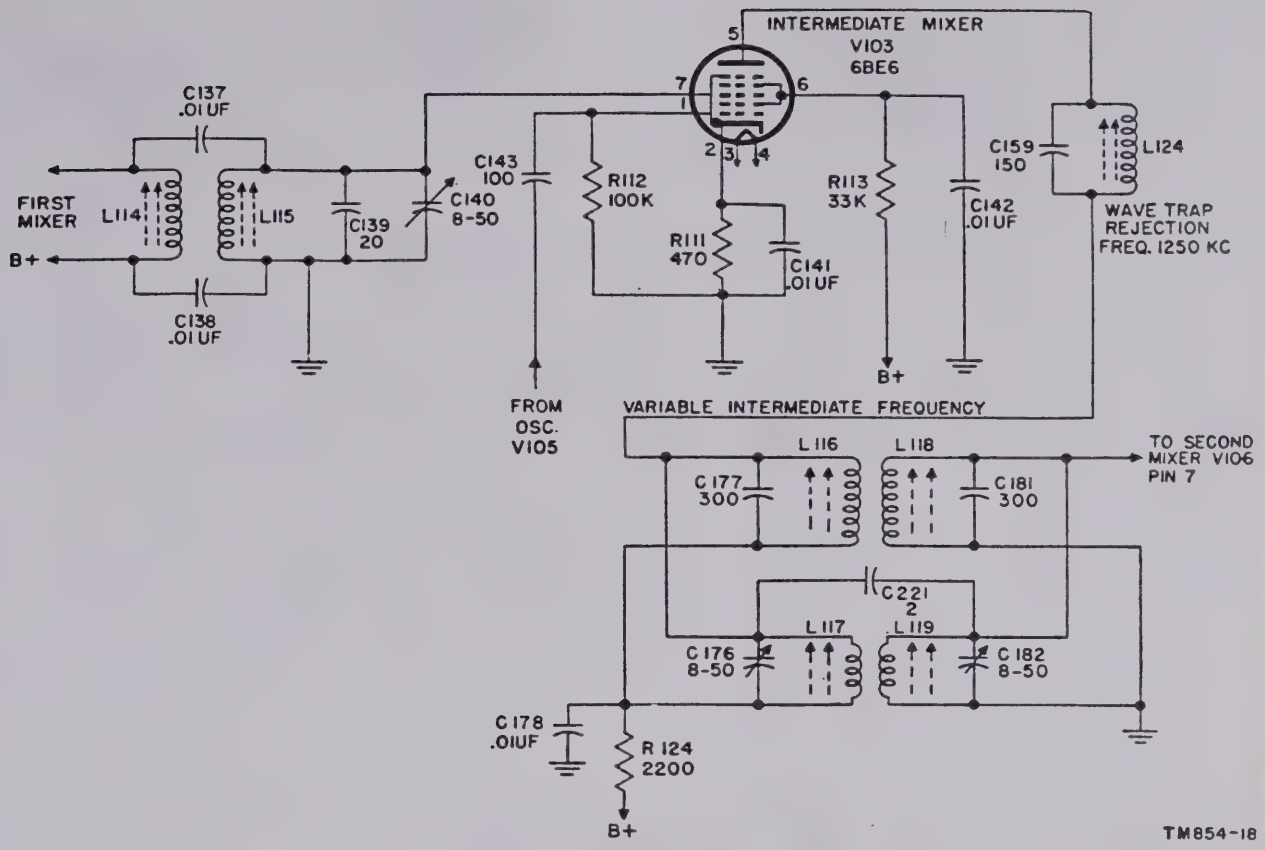

Figure 18. Intermediate mixer, schematic diagram.

keep it out of the 500-kc i-f amplifier channel. Capacitor C184 reduces the higher order harmonics from the variable-frequency oscillator. The oscillator signal is applied to the injection grid at pin 1 and the variable i-f signal is applied at the control grid (pin 7) for mixing. The i-f output at the plate (pin 5) of the second mixer, V106, represents the input frequencies, their sums, and their differences. The desired 500-kc signal voltage is developed across the primary of transformer T101. Resistor R123 is the injection grid resistor. Resistor R127 and capacitor C183 are the cathode bias resistor and bypass capacitor, respectively. Capacitor C185, in conjunction with resistor R128, forms the screen (pin 6) decoupler. Resistor R128 is the voltage-dropping resistor for the screen grid. Resistor R129 and capacitor C186 decouple the plate circuit. The plate supply voltage is applied through resistor R129 and the primary of T101. The output signal voltage from the plate is conducted through a shielded cable to the primary of transformer T101 (where the plate circuit is tuned) and coupled to the i-f crystal filter state.

43. High-Frequency Crystal Oscillator

The h-f oscillator, V105, type 6AK5, is a modified Pierce oscillator using 10 frequency-controlling crystals, each so selected that when its fundamental or harmonic signal is beat with the signal voltage in the first mixer, V102, it will produce in the mixer a usable output frequency between 2.5 and 1.5 mc or 3.5 and 2.5 mc on all tuning steps except steps 1, 2, and 3. On tuning step 1, the h-f oscillator produces a 12-mc signal for introduction to the first mixer, V102, and an 8-mc signal for introduction to the intermediate mixer, V103 (figs. 11 and 12). The h-f oscillator, V105, is not used in tuning steps 2 and 3, the signal on these steps being fed directly from the r-f amplifier to the second mixer, V106, through the variable i-f coils.

a. Tuning Step 1. Four-mc crystal Y110 is placed across the grid (pin 1) and in series with

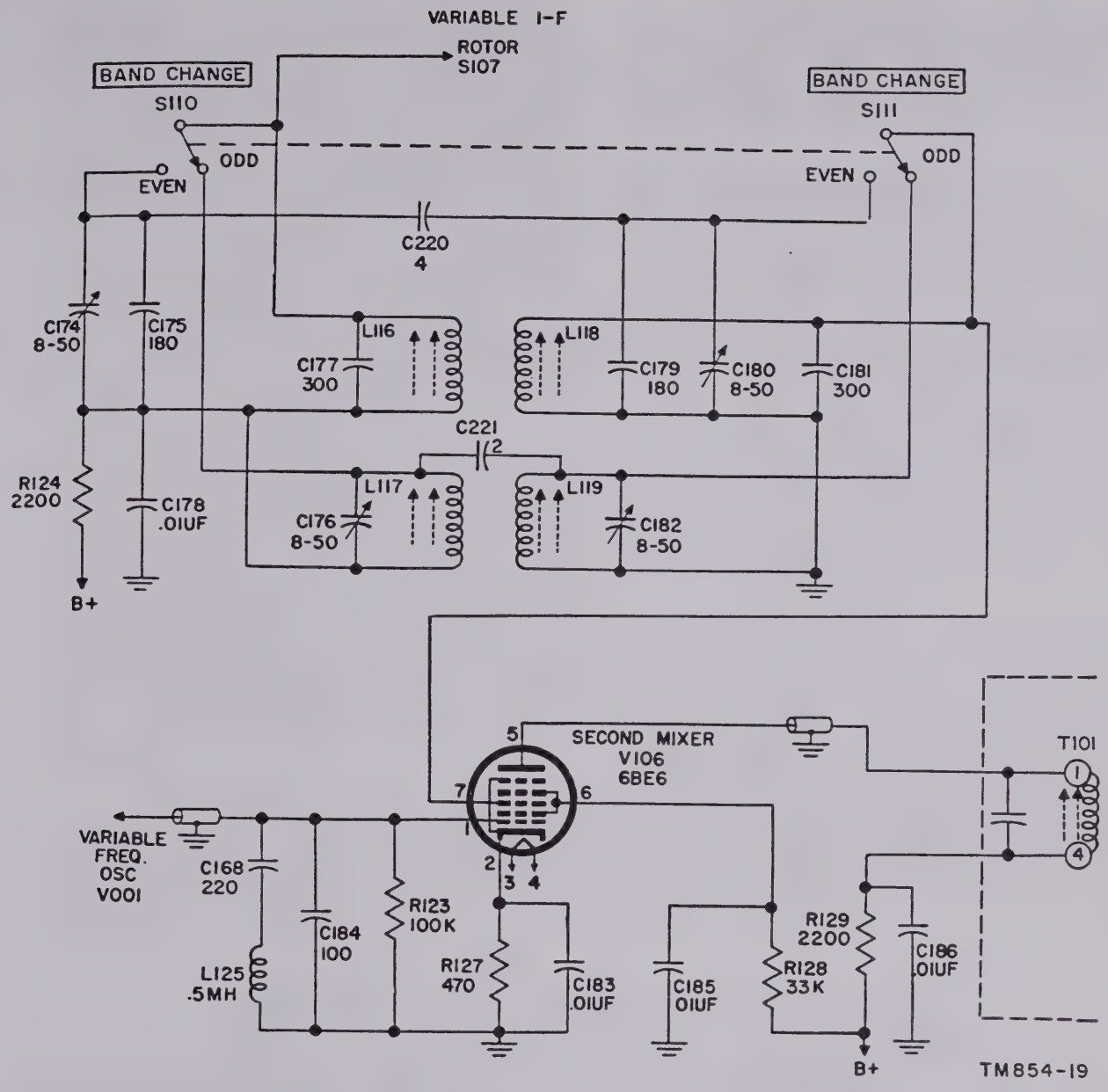

Figure 19. Second mixer and variable intermediate frequency, schematic diagram.

coil L120 to the cathode (pin 7) of V105. With the operating voltage applied, oscillations are maintained by the in-phase feedback voltage being produced across r-f choke L120 in the oscillator tube cathode circuit. Capacitors C165 and C166 form the oscillator feedback network. Capacitor C167 trims the total crystal circuit to 32 $\mu\mu$f for proper operation and frequency. Resistor R115 is the oscillator grid resistor. Oscillator tube screen voltage is obtained through voltage-dropping resistor R114, and the screen grid is held at r-f ground potential by capacitor C164. Resistor R117 is the plate voltage-dropping resistor for V105. Inductor L121 is split-tuned to provide second and third harmonic voltages of the crystal fundamental for application to intermediate mixer V103 and first mixer V102, respectively, in the following manner: The plate current flow of V105 through inductor L121 (upper half of coil) contains the fundamental and its harmonics. The tap on inductor L121 is held at r-f ground potential

AGO 3261A

by capacitor C163, but the plate current flow through the upper half of the coil induces in the lower portion of the coil the fundamental and all of its harmonics. The top portion of inductor L121, fixed trimmer C161, and alinement trimmer C162 form a parallel-resonant circuit tuned to the third harmonic (12 mc) of crystal Y110. The developed oscillator voltage is coupled to first mixer V102 by capacitor C136. The lower portion of inductor L121, fixed trimmer C145, and alinement trimmer C144 form a parallel-resonant circuit tuned to the second harmonic (8 mc) of crystal Y110. The oscillator voltage developed is applied to intermediate mixer V103 through capacitor C143.

b. Tuning Steps 4 Through 12. On tuning steps 4 through 12, wafer switch S108 back contacts (fig. 42) provide the B+ voltage to V105 through plate load resistor R116. The h-f oscillator plate circuit is not tuned and the fundamental of the crystal frequency is taken from the plate for injection into first mixer V102. On these tuning steps, inductor L121 is not in the oscillator plate circuit. Refer to paragraph 4c for a listing of crystal frequencies used, and the injection frequencies for tuning steps 4 through 12.

c. Tuning Steps 13 Through 30. On tuning steps 13 through 30, the basic circuit arrangement of crystal oscillator V105 remains the same (fig. 20), but only the upper half of inductor L121 is tuned to secure the desired harmonic voltage for application to first mixer V102 (fig. 42). Capacitors C146 through C162 are switched by S108 across the upper half of L121 to form resonant circuits at the desired harmonic frequencies.

44. Variable-Frequency Oscillator

The vfo unit is composed of an oscillator and a buffer amplifier, electrically isolated and shielded from the rest of the receiver by a hermetically sealed metal case. The vfo tunes over the 2- to 3-mc frequency spectrum. The purpose of the buffer amplifier is to isolate the oscillator from varying load changes, amplify the oscillator voltage, and provide to the oscillator an in-phase feedback voltage to sustain oscillations. A voltage regulator tube V116 type OA2 is shunted across the B+ line to the oscillator plate to eliminate frequency drift caused by plate voltage variations.

a. Oscillator V001. Oscillator tube V001 is a type 6BA6, arranged in a circuit similar to a Hartley but different from it in that the in-phase feedback voltage is obtained from the amplifier tube V002 screen circuit through capacitor C008. The oscillator tank circuit consists of trimmer inductor L002, permeability-tuned inductor L001, and tank capacitor C001 in parallel with temperature-compensating capacitors C002 and C003. The value of C002 will differ from receiver to receiver, the correct

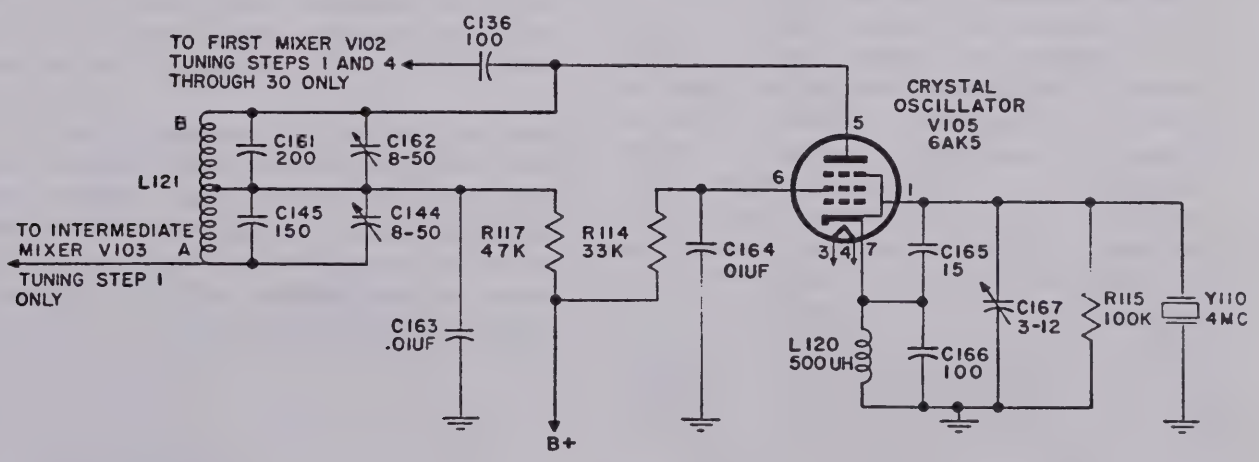

NOTE
FOR CIRCUIT COMPONENTS OF OSCILLATOR FOR TUNING STEPS 4 THROUGH 30, SEE RECEIVER SCHEMATIC DIAGRAM, AND PARAGRAPH 54

TM854-20

Figure 20. Crystal oscillator, tuning step 1 only, schematic diagram.

value being selected for a particular oscillator by factory test. The oscillator is tuned by movement of the iron core within the inductor L001 form. The powdered iron core, or slug, traverses a lead screw which is rotated by the receiver tuning control. Inductor L001 is tapped near the ground end and is connected through capacitor C008 to the screen of V002, resulting in some of the amplified oscillator voltage being fed back to the inductor (L001) to sustain oscillations. C004 and R001 are the grid capacitor and resistor, respectively. The oscillator tube is triode-connected and obtains its plate voltage through plate load resistors R002 and R003. The value of resistor R002 determines the amount of r-f voltage coupled to amplifier tube V002. The r-f voltage drop across resistor R002 is coupled to the control grid of V002 through capacitor C007 and through capacitor C005 to the ground or cathode of V002.

b. Buffer Amplifier V002. The buffer amplifier isolates the oscillator from the load (V106) and provides a small feedback voltage to sustain oscillations in the oscillator grid tank. Tube V002, type 6BA6, is pentode-connected, and obtains its drive from the oscillator voltage developed across grid resistor R005. The amplifier r-f output voltage is developed across plate load resistor R006 and coupled to second mixer V106 (pin 1) through capacitor C009 and a length of coaxial cable. The screen grid (pin 6) of V002 is supplied with the correct potential through voltage-dropping resistor R007. Both the oscillator V001 and buffer amplifier V002 plate circuits are decoupled from the power supply by resistor R004 and capacitor C006.

c. Voltage Regulation. Both the oscillator and buffer amplifier tubes secure their plate and screen voltage from a regulated source. The plate supply end of resistor R004 is connected to voltage regulator tube V116, type OA2, anode (pins 5 and 1). The regulator tube is series-connected with current-limiting resistor R181 across terminal 2 of power supply filter choke L122 and ground.

TM854-20

45. Crystal Filter

A 500-kc crystal, Y112, is used in a highly selective crystal filter i-f circuit (fig. 22) to enable the separation of the wanted signal from the interfering signals. A phasing capacitor, C188, is provided to shift the crystal rejection slot (parallel resonant frequency) so that unwanted signals can be eliminated. The SELECTIVITY control, by selection of resistors, varies the series resistance of the crystal circuit, thereby changing crystal Q and bandpass.

a. The secondary winding of transformer T101, crystal Y112, and phasing capacitor C188 form a bridge. Capacitor C187 (10 $\mu\mu$f) is shunted across crystal Y112 to bring the crystal holder capacitance up to the design factor chosen by the manufacturers of this receiver. When phasing capacitor C188 is adjusted to equal the total shunt capacitance presented by the Y112 crystal holder and C187, the following circuit conditions exist: An incoming 500-kc signal develops equal and opposite signal voltages across the halves of the secondary winding of T101. The reactive drop across C188 is equal to and opposite to the voltage developed across the crystal holder capacitance. Since the crystal is at series resonance at 500 kc, its impedance is low and the voltage generated across the upper half of T101 is applied through the low impedance (Y112) and across transformer T102. The impedance of Y112 rises sharply for frequencies off resonance, resulting in attenuation of a 500-kc carrier's extreme sidebands and adjacent signal frequencies.

b. A variable control of the i-f bandpass is obtained by the insertion of resistors in series with the crystal circuit. The SELECTIVITY control provides a choice of 5° of selectivity or bandpass. In position 0, the crystal is shorted out and the selectivity is determined by the Q of the L-C receiver circuits alone. In position 1, the selectivity of the circuit is lowest because of the series insertion of the high impedance represented by a parallel-resonant circuit consisting of T102 and its trimmer. In positions 2, 3, and 4, resistors R130, R131, and R132, respectively, are switched in series with Y112 to r-f ground. Resistor R132, being the lowest in value, allows development of highest Q of Y112 and narrowest bandpass.

c. Capacitor C188 not only neutralizes the voltages passed by the crystal holder, but serves to shift the rejection slot of the crystal filter circuit. The crystal holder and crystal act as a

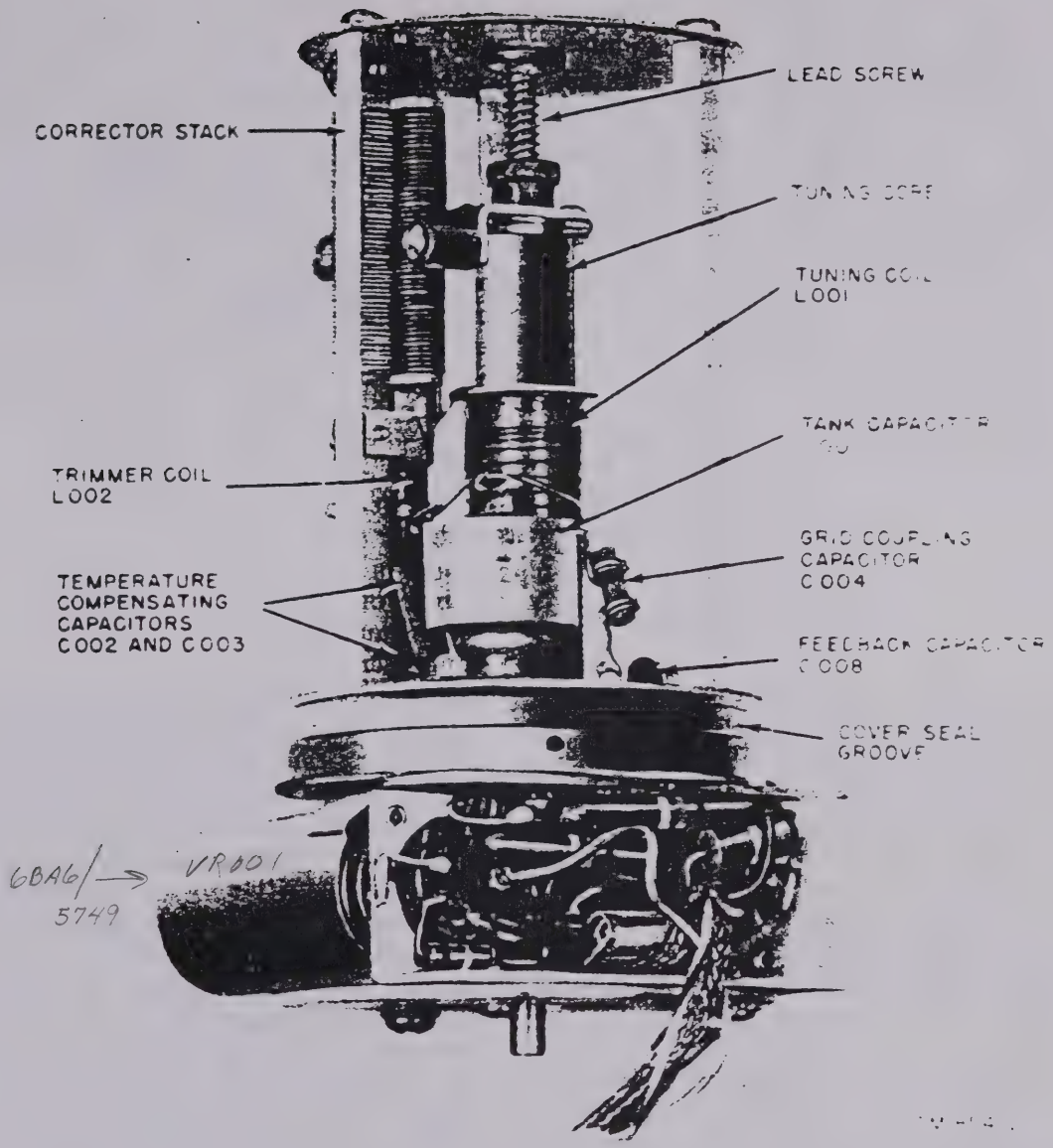

Figure 21. Vfo, shield cover removed.

parallel resonant circuit at frequencies slightly higher than the series resonant frequency, and PHASING capacitor C188 can be used to change the effective capacitance of the crystal circuit.

46. Intermediate-Amplifier Stages

There are three i-f stages in Receiver R–388/URR: V107, V108, and V109. Each stage uses a 6BA6 miniature pentode. Tuning between stages is done with permeability-tuned transformers T102, T103, T104, and T105. The purpose of the i-f stages is to amplify and to provide selectivity for the 500-kc intermediate frequency before the audio note is separated in the succeeding detector stage. An incoming signal is coupled to the first i-f section by permeability-tuned inductor T102. The signal developed across T102 is applied to the control grid (pin 1) of V107, through a grounded shield. The grid voltage is developed across resistor R125. Resistor R133, in conjunction with capacitor

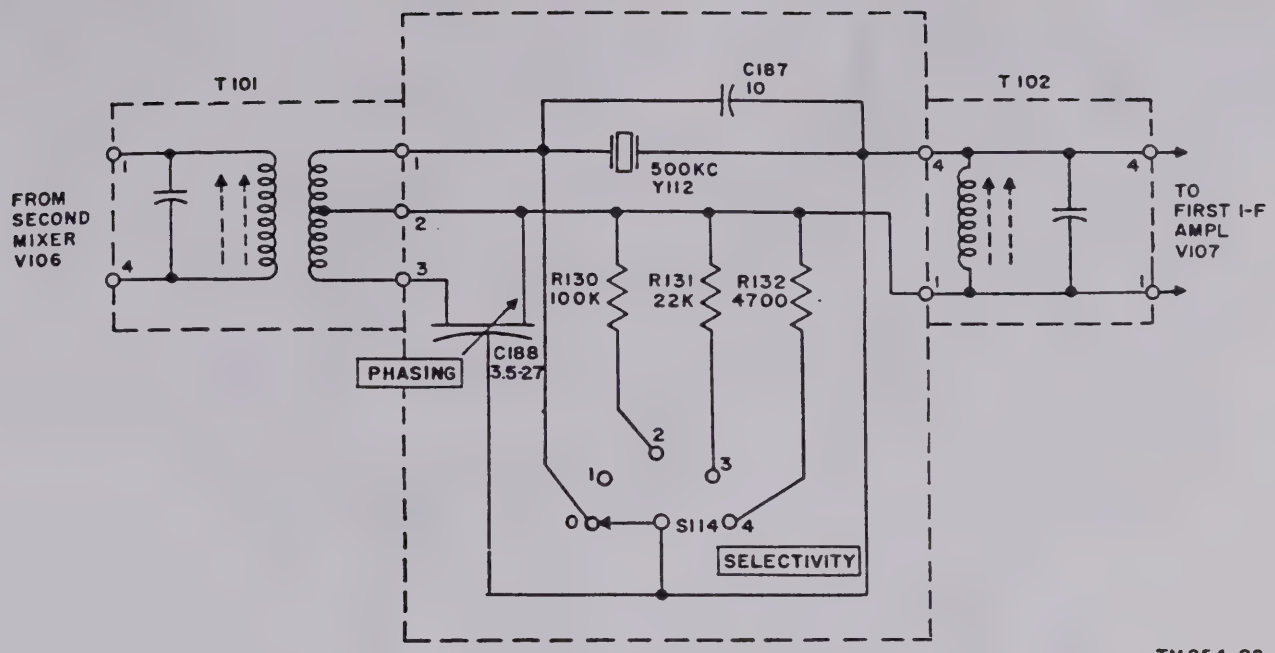

Figure 22. Crystal filter, schematic diagram.

C189, forms the grid avc decoupling unit. Operating voltage for the screen (pin 6) is taken from the voltage divider consisting of resistors R126 and R134. Capacitor C190 is the screen bypass. The plate supply voltage is fed from switch S113 through load resistor R135, which, in conjunction with capacitor C191, also serves to prevent interstage coupling. The output from the first mixer plate (pin 5) is coupled to the second mixer by permeability-tuned transformer T103, and applied to the control grid (pin 1) of the second i-f tube V108. Resistor R136 and capacitor C193, form the grid avc decoupling. (Fixed bias in the form of an avc voltage is applied to the grids of all the i-f tubes, when this circuit is placed in operation by switch S115). R137 is the voltage-dropping resistor for the screen. Capacitor C194 is the screen bypass to ground. The plate supply voltage is fed through load resistor R138 and the primary of transformer T108 to the plate (pin 5). Resistor R138 and capacitor C195 form the plate decoupling circuit. The amplified signal from the plate is coupled to the third i-f stage through permeability-tuned transformer T104. Capacitor C196 is shunted across the primary and secondary of the transformer to increase the transformer coupling and to give the proper bandwidth. A center tap on the transformer secondary feeds the signal voltage to the grid (pin 1) of the third i-f stage, V109. Fixed bias voltage and an avc voltage is applied to the grid through resistor R139. This resistor, with capacitor C197, also forms the decoupling network for the grid circuit. Capacitor C198A is the cathode bypass. The plate supply voltage is applied through decoupling resistor R142 and the primary of transformer T105 to pin 5. Resistor R141 drops the screen voltage. Capacitor C199 is the screen bypass to ground. Resistor R142 and capacitor C200 provide the plate decoupling. The output of V109 is coupled to the detector by transformer T105. Capacitor C201 connected from the transformer primary (terminal 1) to the secondary (terminal 4), increases the coupling and gives the proper bandwidth.

47. Detector

The detector tube, V110A, is a triode with grid and plate tied together for diode operation (fig. 24). The i-f signal voltage across winding 6–3 of T105 is applied across the diode plate and cathode. Rectification occurs on the positive half cycle and the rectified current flows through T105 secondary, terminals 6 to 3, and through the diode load resistors R150 and R151

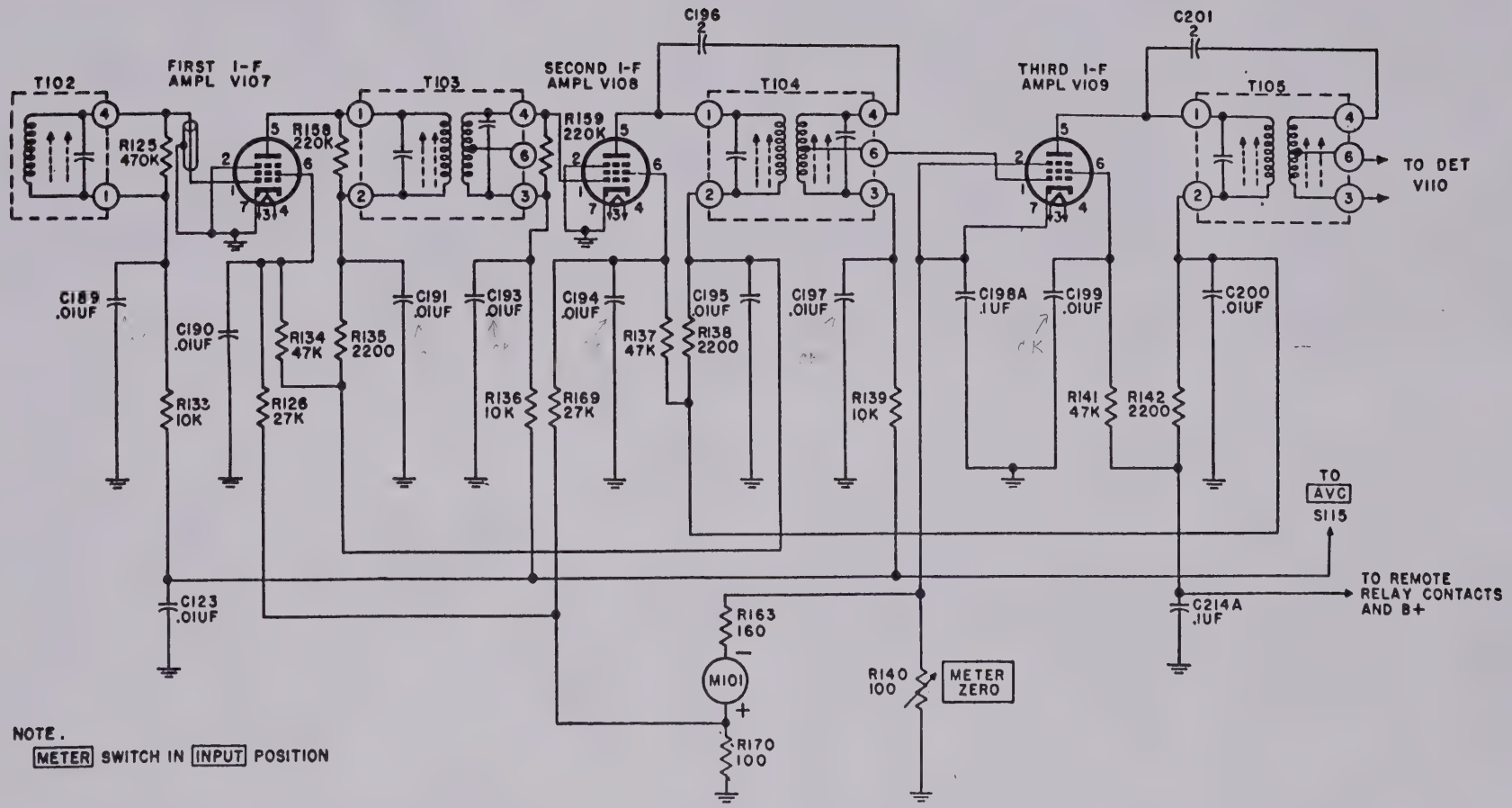

Figure 23. I-f stages, schematic diagram.

to ground and return to cathode. Capacitor C202 is the i-f filter capacitor. That portion of the developed a-f voltage appearing across R151 is applied to limiter V112A and the following a-f stage. I-f signal voltage for the avc circuit is taken from the detector plate and applied through capacitor C204 to avc tube V110B cathode (fig. 25). The i-f output tube secures its i-f signal from coupling to the detector diode plate through C226.

48. I-F Output

The i-f output tube, V111B, type 12AU7, functions as a cathode follower to provide a low-impedance i-f output at coaxial connector J104. The i-f signal is applied to the follower grid from a voltage divider consisting of resistors R177 and R178 which are in series with capacitor C226 between the detector tube plate and ground. Only that portion of the entire drop appearing across R178 of the divider is utilized for follower grid voltage. Tube V111B is operated class A, bias being secured from the drop across cathode resistor R179. Resistor R180 is the plate voltage-dropping resistor. Capacitor C227 places the follower plate at signal ground potential. The i-f signal voltage across resistor R179 is coupled to the IF OUTPUT jack through capacitor C228. The i-f output tube signal frequency is 500 kc and any converter unit to which this output is coupled must be capable of amplifying and rectifying this signal for operation of teletypewriters.

49. AVC and AVC Amplifier

The receiver avc system which feeds a low-impedance line, effectively eliminates blocking on strong input signals and maintains steady output signals over a wide range of input signal variations. Avc tube V110B produces the control voltage for triode avc amplifier V111A grid.

a. Avc V110B. The i-f signal voltage is coupled to avc tube V110B through capacitor C204 and across resistor R145 (fig. 25). Avc tube V110B is a triode which is diode-connected. The application of i-f signal voltage between cathode and plate produces a rectified a-f current flow through R145. The a-f voltage is filtered before application to the avc amplifier tube by resistor R144 and C205B. The time constant of R144 and C205B is approximately .06 second. The avc voltage does not have instantaneous effect on input signals because the avc amplifier V111A has a d-c bias of approximately —9 volts on its grid, which makes this a delayed avc system.

b. Avc Amplifier V111A. The avc circuit works only when AVC switch, S115, is in the ON position. Switch S115 completes tube V111A

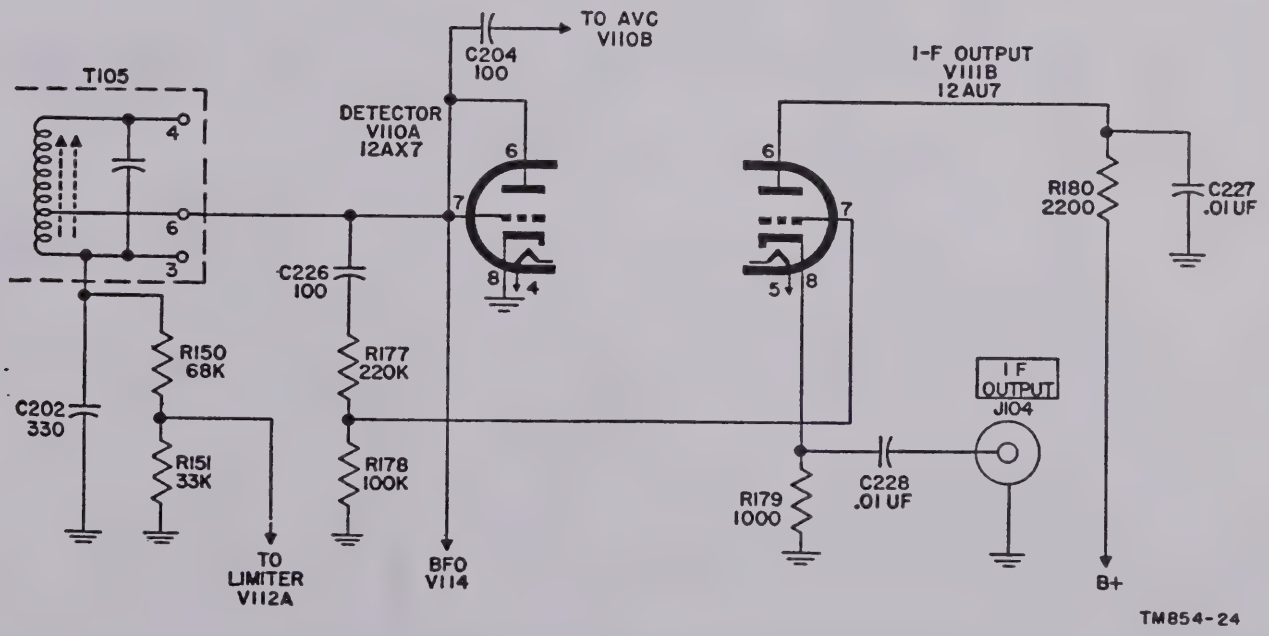

Figure 24. Detector and i-f output stage, schematic diagram.

plate circuit. The complete grid circuit of tube V111A, grid to cathode, consists of series-connected resistors R171, R144, R145, R164, and cathode resistor R168. Resistor R164 is part of the power supply voltage divider and fixes the operating bias of V111A (—9 volts). The plate voltage for tube V111A is secured from another divider consisting of resistors R147, R148, and R149. The plate (pin 1) of tube V111A is connected through plate load resistor R146 to a tap between R147 and R148. Potential at this point is more positive than the cathode divider tap, resulting in application of a positive voltage to tube V111A plate. When the rectified and filtered carrier (avc voltage) across capacitor C205B exceeds the grid d-c bias (—9 volts), the avc amplifier tube conducts. The plate current flow through resistor R146 produces an avc voltage in proportion to the strength of the input signal. The avc line is connected to the negative side of resistor R146. Degenerative feedback is used with resistor R167 and capacitor C208 connected between plate and grid to prevent the avc amplifier tube V111A from responding to low audio frequencies.

c. Manual Gain Control. When the AVC switch, S115, is in the OFF position, the avc amplifier plate circuit is open, resistor R146 is shorted by the switch, and a manually controllable bias is applied to the low-impedance avc line. The avc line is connected between resistors R146 and RF GAIN resistor R148, which with resistor R149 are series-connected as a voltage divider from the power transformer T108 h-v winding center tap to ground. The RF GAIN control provides manual control of receiver gain. Tubes controlled by the avc and manual voltage are V101, V107, V108, and V109.

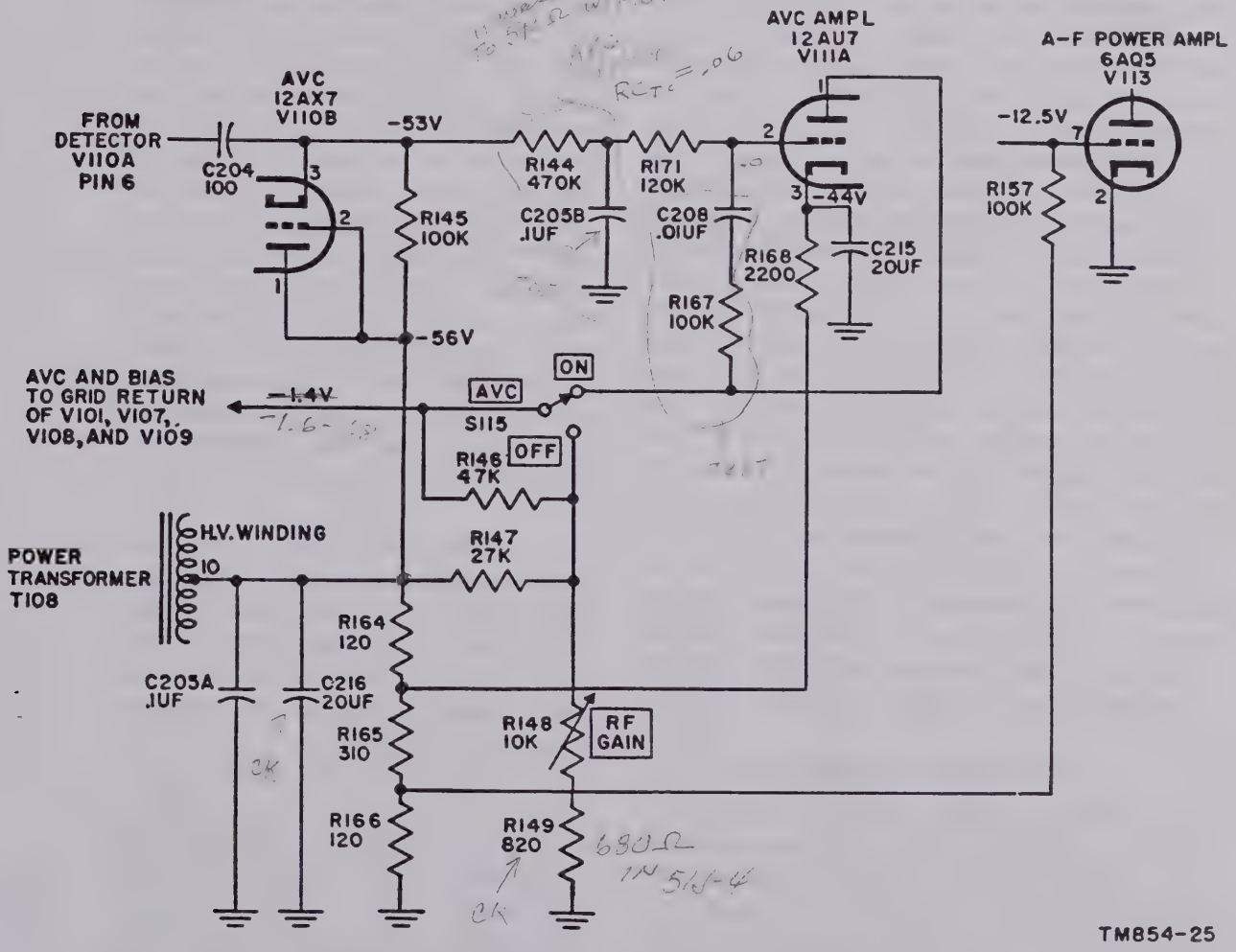

Figure 25. Avc and avc amplifier stages, schematic diagram.

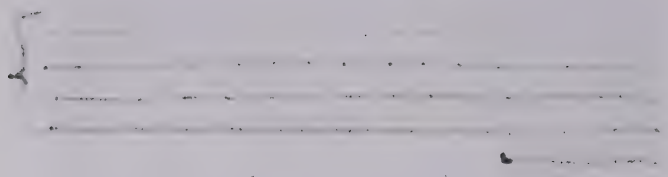

50. Noise Limiter and A-F Amplifier

a. Noise Limiter V112A. Signal input for the noise limiter tube, V112A, type 12AX7, is taken from the detector load resistor consisting of R150 and R151. The drop across resistor R151 furnishes the required a-f voltage. The noise limiter tube acts as a series conductor of the audio voltage between detector and a-f amplifier during non-noise periods. When the noise peaks occur, the limiter tube does not conduct and the a-f voltage does not reach the a-f amplifier.

(1) Resistor R152 and capacitor C205C are series-connected from the negative side of R150 to ground. Resistor R153 is connected from the junction of R152 and C205C to the cathode of noise limiter tubes V112A. The time constant of R152 and C205C is such that all a-f is filtered and a steady negative bias applied to the cathode of V112A. The values of R152 and C205C are sufficient so that variations in af appearing across R150 and R151 do not affect the negative bias on the cathode of V112A. The cathode is kept at the potential of the negative end of R150.

(2) The plate of the limiter tube is connected to the junction of resistors R150 and R151. The potential at this point, and consequently the limiter plate potential, is more positive than the limiter cathode potential, and the tube conducts at the frequency at which the a-f voltage drop across R151 varies.

(3) On noise peaks, the voltage drop across R151 hits a simultaneous peak, which results in a large negative potential being applied to the limiter plate. Since R152 and C205C have a relatively large time constant (.047 second) a slow change in potential occurs at the limiter cathode. This condition allow the limiter plate to attain a more negative potential than the cathode and the limiter tube ceases to conduct. As soon as the noise peaks diminish, the limiter tube conducts, and the audio is transferred to the a-f amplifier through C209 and across AUDIO GAIN resistor R154.

b. A-F Voltage Amplifier V112B. A-f voltage amplifier V112B, type 12AX7, is operated class A and has cathode degeneration and controllable a-f gain. The a-f signal from the limiter stage is coupled to the amplifier through capacitor C209 and applied across the AUDIO GAIN resistor R154. The required amount of a-f drive is taken from R154, between slider arm and ground, and applied to the grid of V112B. Cathode bias voltage is developed across cathode resistor R155. The output a-f voltage is developed across plate load resistor R156 and coupled to the a-f power amplifier through capacitor C211.

c. A-F Power Amplifier V113. The a-f power amplifier V113 uses a tube type 6AQ5. The output of the a-f voltage amplifier, V112B, is applied across the grid resistor R157 of V113. The d-c grid bias is developed across resistor R166, a part of the power supply voltage divider consisting of resistors R164, R165, and R166 (fig. 25), and applied to V113 grid through resistor R157. Tube V113 output is developed across the primary of output transformer T107, induced in the tapped secondary winding, and applied from the appropriate portion of the secondary to either the PHONES or SPEAKER jack. Located at the rear of the receiver is a terminal strip labeled G, 4, and 600, to which external audio reproducing units can be connected. The SPEAKER and PHONES jacks are connected across the 600-ohm winding of the transformer. Screen voltage for V113 is obtained by connection to terminal 2 of filter choke L123 (fig. 42). Plate voltage for V113 is obtained by connecting the plate return side of the primary winding of T107 to terminal 2 of filter choke L122. Capacitor C212 connected between plate of V113 and terminal 2 of transformer E107 discriminates against the higher audio frequencies to equalize audio output.

51. Beat-Frequency Oscillator

The beat-frequency oscillator uses a type 6BA6 pentode tube, V114, in a Hartley circuit. The oscillator inductor, tuning capacitors, grid capacitor, and grid resistor are all contained in transformer T106 shield can. Connections from the packaged elements to their external

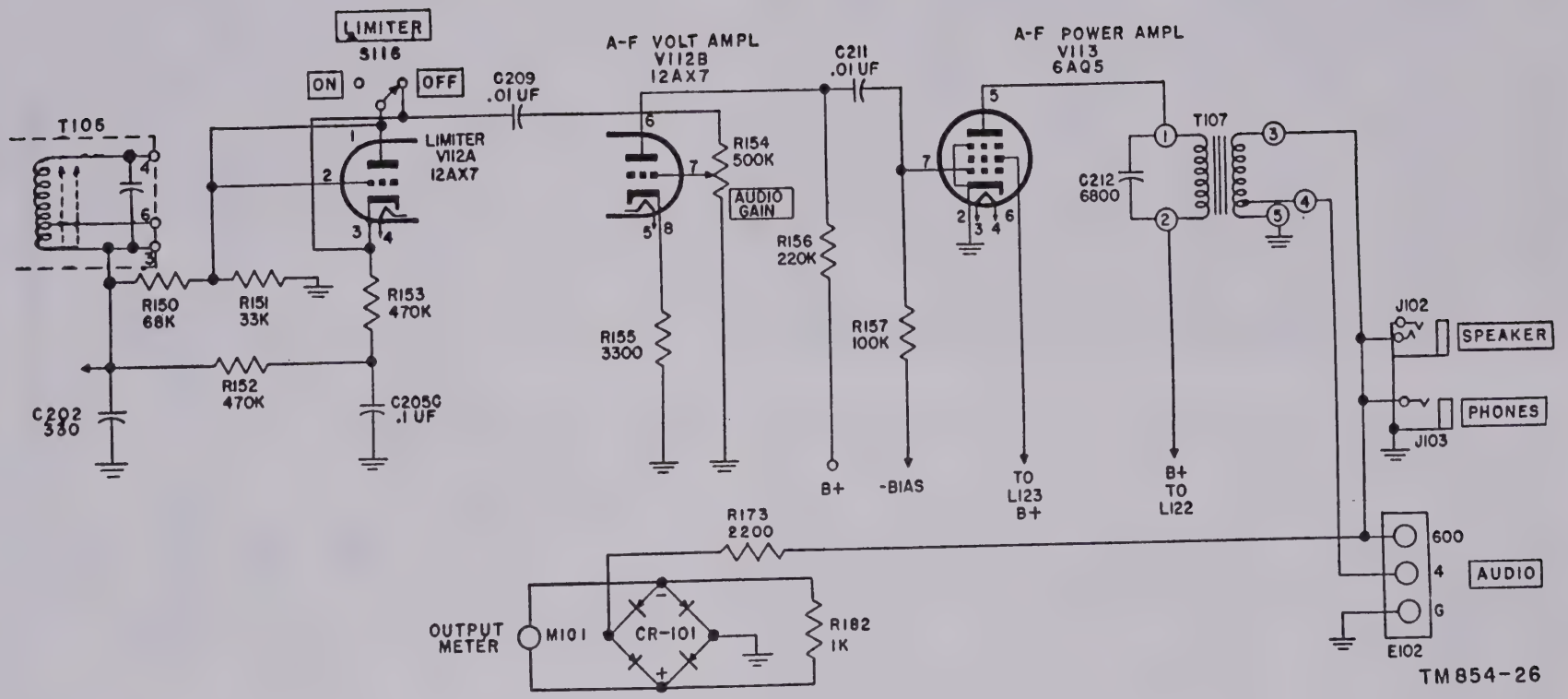

Figure 26. Limiter and audio amplifier stages, schematic diagram.

circuit are made from terminals 1, 5, and 2 of T106 (fig. 27).

a. The grid, cathode, and screen elements of tube V114 serve as a triode oscillator and output is taken from the plate through its coupling in the electron stream. The tank inductance in T106 is tapped and connected to V114 cathode for feedback path, screen to cathode. The BFO PITCH capacitor is in the T106 can and has an extension shaft to the front panel for control of beat frequency. The bfo output is fed to the detector V110A plate through capacitor C206.

b. The screen voltage for V114 is obtained through voltage-dropping resistor R160. The bfo tube plate load resistor is R161, and both R160 and R161 have their common plate return sides decoupled from the rest of the receiver by capacitor C210 and resistor R162. The BFO switch, S112, controls the screen voltage applied to V114 and consequently the operation of the bfo stage. When BFO switch, S112, is in the OFF position, the screen element is grounded through the switch contacts and screen voltage is removed from the tube. Capacitor C218 is the screen r-f bypass.

52. Calibration Oscillator

The receiver has a 100-kc calibration oscillator which has usable harmonic output voltages up to 30.5 mc. The output of the oscillator is applied to r-f amplifier V101 grid to provide check points at every 100 kc throughout the tuning range of the receiver for calibration purposes.

a. Tube V104, type 6BA6 is arranged in a Pierce circuit and uses a 100-kc crystal in place of the conventional tank circuit of coil and capacitor. Tube V104 is a pentode and the control grid, screen, and cathode are used as a triode oscillator. The oscillator output is coupled through the electron stream to the plate and then through coupling capacitor C173, a shielded lead, and another coupling capacitor C111 to the control grid (pin 1) of the r-f amplifier, V101 (fig. 42).

b. Crystal Y111 is connected between V104 control and screen grids to serve as the tank circuit of the Pierce oscillator (a version of the Ultraudion oscillator). The feedback voltage to sustain oscillations is developed across C169, which with capacitor C224 forms a voltage-dividing network effectively providing an

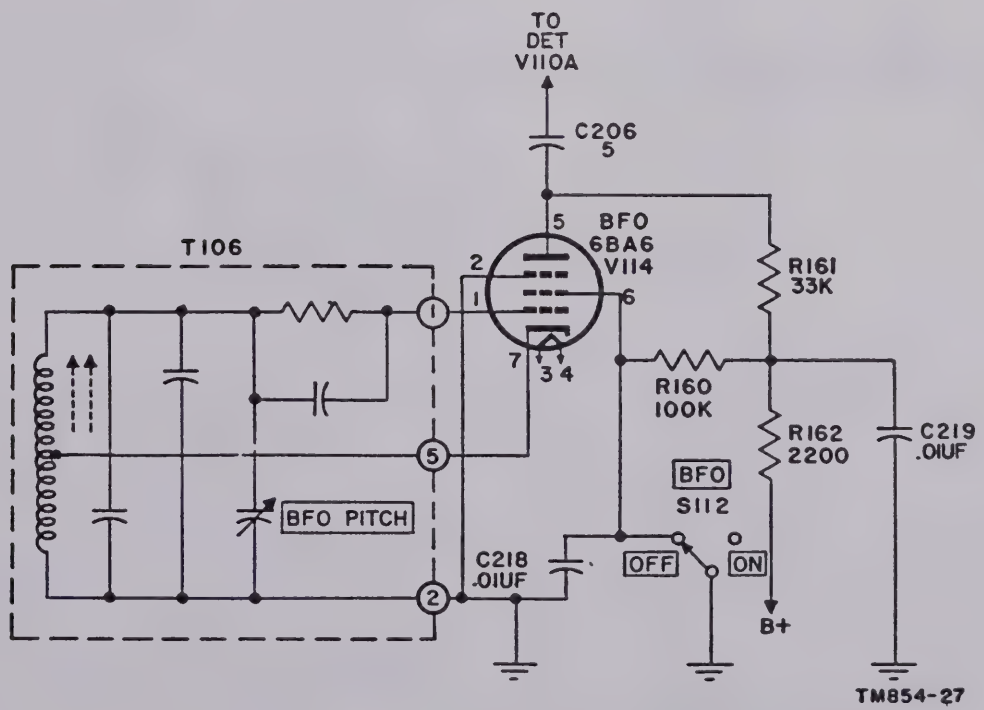

Figure 27. Beat-frequency oscillator, schematic diagram.

AGO 3261A

electrical ground or tap for the tank circuit. Capacitor C224 is a variable panel control (CAL.) and is used to adjust the oscillator frequency to exactly 100 kc by zero beating the harmonic voltage output against a source of standard frequency transmissions such as are radiated from WWV.

c. The calibration oscillator component functions are as follows: resistor R118 is the grid resistor, resistor R119 is the cathode bias resistor, and C170 is the cathode bypass capacitor. Screen and plate voltage for V104 are obtained through voltage-dropping resistors R120 and R121, respectively. Capacitor C171 is the screen r-f bypass. The return side of R120 and R121 have a common decoupling unit consisting of capacitor C172 and resistor R122.

d. The CALIBRATE switch, S118, completes the cathode circuit for V104. When S118 is at the OFF position, the cathode is open and the oscillator is inoperative.

53. Power Supply

The receiver power supply (figs. 29 and 42) is a full-wave circuit using a rectifier tube V115, type 5V4. The supply can be operated from a 115-volt, 45- to 70-cycle source and has provisions for 230-volt operation.

a. The power transformer T108 has two primary windings parallel-connected for 110-volt operation, which can be connected in series for 230-volt operation. Fuse F101 protects the T108 primary winding and switch S113 completes the T108 primary circuit in the STANDBY and ON positions. Switch S113, when in the ON position, also completes the B+ circuits to the i-f amplifier tubes, V107, V108, and V109. Transformer T108 has three secondary windings; h-v winding 11–10–9 supplies the necessary potential for rectifier tube V115 plates; winding 5–6 supplies filament voltage for tube V115; and winding 7–8 supplies 6.3 volts ac for the receiver tube filaments.

b. The a-c plate voltage is applied to V115 (pins 4 and 6) and the rectified output is taken from the filament (pin 8). The filter section of the supply consists of input choke L122 followed by a pi-section consisting of choke L123 and filter capacitors C217A and C217B.

c. Voltage for the vfo unit and the a-f power tube, V115, is taken from the junction of chokes L122 and L123. The vfo unit voltage is regu-

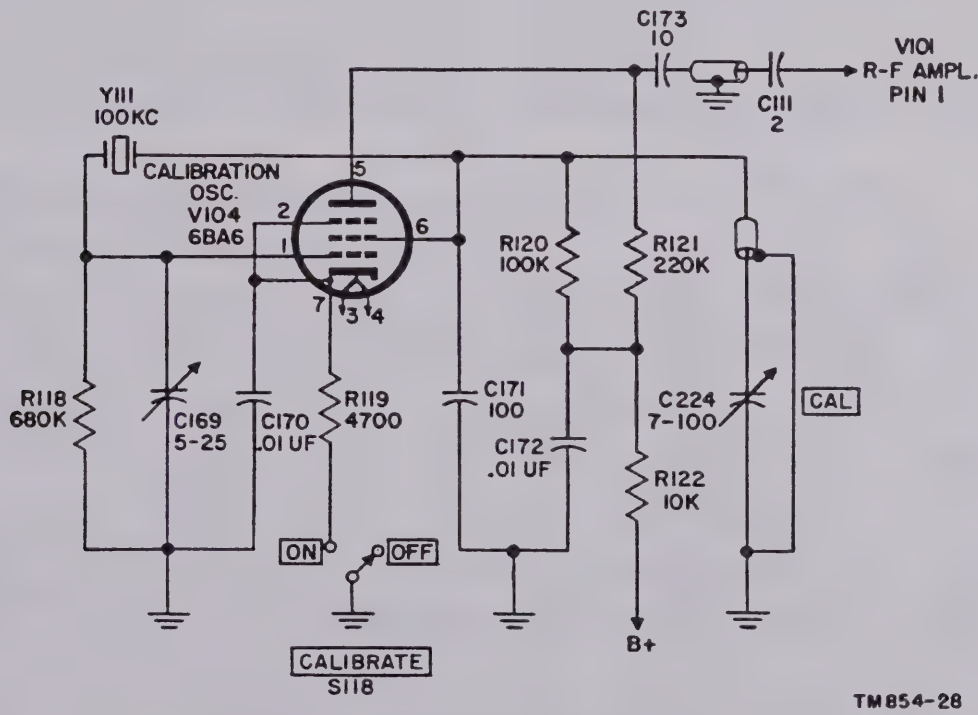

Figure 28. Calibration oscillator, schematic diagram.

lated by current limiting resistor R181 and voltage regulator tube V116 type OA2. Voltage for the remaining receiver circuits is taken from the output side of the supply, terminal 2 of choke L123, and supplied through the ON position contact of S113 and relay K101 contacts.

54. Input-Output Meter

A 0- to 1-ma meter mounted at the upper right side of the receiver panel functions as a tuning meter and an output meter. The meter is calibrated in 20-, 40-, 60-, 70-, and 100-db input signal levels and —10 to +6 db audio output level (6 mw reference). INPUT-OUTPUT METER switch S117, a momentary spring return toggle switch, is provided to change the meter connections.

a. Input Meter. When the INPUT-OUTPUT METER switch S117 is in its normal position (INPUT), the meter circuit is arranged as an S meter, as shown in figure 23. The i-f amplifier tube V107 and V108 screen voltage dividers have their return through resistor R170. Resistor R170, meter M101, and resistor R163 are series-connected across i-f amplifier tube V109 cathode bias resistor R140. R140 is variable and is used as a METER ZERO resistor. With no signal input to the receiver, the voltage drops across R163 and R170 are equal and opposite in potential and no current flows through the meter. When the input signal increases, the avc voltage fed back to the grid circuit of V107 and V108 increases with a resultant decrease in screen current of these tubes. The voltage drop across R170 in the return side of V107 and V108 screen voltage dividers increases, a voltage unbalance occurs across R170, M101, and R163, and current proportional to the signal strength flows through the meter.

b. Output Meter. When the INPUT-OUTPUT METER switch, S117, is in the OUTPUT position, meter M101 measures the audio output level of the receiver (fig. 26). Voltage-dropping resistor R173 and rectifier unit CR101 are in series across the 600-ohm output transformer T107 secondary winding. The rectified voltage is developed across rectifier CR101 load resistor R182. The rectified output level is indicated by M101 connected across resistor R182.

55. Band Switching

The band switching is done by rotary switches 1 to 11. These are ganged, wafer type switches that respond to the BAND CHANGE knob by a system of gear trains. The gear trains are arranged so that the correct switch combinations are selected to cut in the appropriate tuning components. Table II illustrates the functions of each switch for rough tuning on each band. For further information concerning the mechanical aspects of tuning, refer to paragraphs 56–59 and figures 30 and 31.

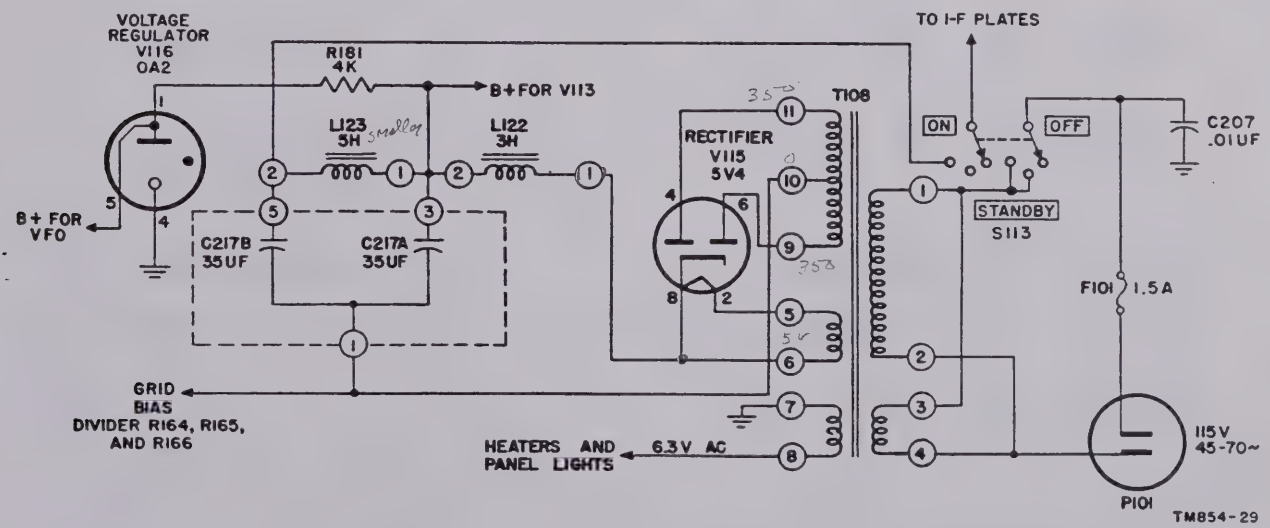

Figure 29. Power supply, schematic diagram.

AGO 3261A

Table II. Switches

Band	Frequency	S101	S102	S103	S104	S105	S106	S107	S108		S109	S110	S111
		Rotor attached to antenna input. Connects with_____	Rotor attached to antenna matching capacitor C230. Connects with_____	Rotor attached to grid (pin 1) of V101. Connects with_____	Rotor attached to plate 5 (pin 5) of V101. Connects with_____	Rotor attached to grid (pin 1) of V102. Connects with_____	Rotor attached to plate (pin 5) of V102. Connects with_____	Rotor attached to S110. Connects with_____	S108 has two contact wafers and rotors, A and B. S108 rotor is attached to the plate (pin 5) of V105 and cuts in appropriate load resistor with B+. S108 chooses coil and capacitor combination for harmonic tuning on various bands.		Rotor attached to grid (pin 1) of V105. Connects with crystals listed.	Variable i-f selector two-position.	Variable i-f selector two-position.
									A	B			
1	.5 to 1.5	C233	C230	L101	B-line	L110	L114 L115	V103 through L124	C161 C162 2d harmonic tuning C144 C145 3d harmonic tuning	R117	4 mc	L116 L117	L118 L119
2	1.5 to 2.5	C234	C234	L102	S107	_____	_____	S104	L121	R116___		L116	L118
3	2.5 to 3.5	C235	C235	L103	S107	_____	_____	S104		R116___		L116 L117	L118 L119
4	3.5 to 4.5	C236	C236	L104	L107	L111	S107	S106		R116	6 mc	L116	L118
5	4.5 to 5.5	C236	C236	L104	L107	L111	S107	S106		R116	8 mc	L116 L117	L118 L119
6	5.5 to 6.5	C236	C236	L104	L107	L111	S107	S106		R116	8 mc	L116	L118
7	6.5 to 7.5	C236	C236	L104	L107	L111	L107	LS106		R116	10 mc	L116 L117	L118 L119
8	7.5 to 8.5	C237	C231	L105	L108	L112	S107	S106		R116	10 mc	L116	L118
9	8.5 to 9.5	C237	C231	L105	L108	L112	S107	S106		R116	12 mc	L116 L117	L118 L119
10	9.5 to 10.5	C237	C231	L105	L108	L112	S107	S106		R116	12 mc	L116	L118
11	10.5 to 11.5	C237	C231	L105	L108	L112	S107	S106		R116	14 mc	L116 L117	L118 L119
12	11.5 to 12.5	C237	C231	L105	L108	L112	S107	S106		R116	14 mc	L116	L118
13	12.5 to 13.5	C237	C231	L105	L108	L112	S107	S106	C157 C158 2d harmonic tuning	R117	8 mc	L116 L117	L118 L119

12	11.5 to 12.5	C237	C231	L105	L108	L112	S107	S106	C157 C158 2d harmonic tuning	R117	8 mc	L116 L117	L118 L119
13	12.5 to 13.5	C237	C231	L105	L108	L112	S107	S106					

AGO 3261A

14	13.5 to 14.5	C237	C231	L105	L108	L112	S107	S106	C157 C158 2d harmonic tuning	R117	8 mc	L116	L118
15	14.5 to 15.5	C237	C231	L105	L108	L112	S107	S106	C155 C156 2d harmonic tuning	R117	9 mc	L116 L117	L118 L119
16	15.5 to 16.5	C238	C232	L106	L109	L113	S107	S106	C155 C156 2d harmonic tuning	R117	9 mc	L116	L118
17	16.5 to 17.5	C238	C232	L106	L109	L113	S107	S106	C153 C154 2d harmonic tuning	R117	10 mc	L116 L117	L119 L119
18	17.5 to 18.5	C238	C232	L106	L109	L113	S107	S106	C153 C154 2d harmonic tuning	R117	10 mc	L116	L118
19	18.5 to 19.5	C238	C232	L106	L109	L113	S107	S106	C152 2d harmonic tuning	R117	11 mc	L116 L117	L118 L119
20	19.5 to 20.5	C238	C232	L106	L109	L113	S107	S106	C152 2d harmonic tuning	R117	11 mc	L116	L118
21	20.5 to 21.5	C238	C232	L106	L109	L113	S107	S106	C150 2d harmonic tuning	R117	12 mc	L116 L117	L118 L119
22	21.5 to 22.5	C238	C232	L106	L109	L113	S107	S106	C150 2d harmonic tuning	R117	12 mc	L116	L118
23	22.5 to 23.5	C238	C232	L106	L109	L113	S107	S106	C149-C151 tuning	R117	13 mc	L116 L117	L118 L119
24	23.5 to 24.5	C238	C232	L106	L109	L113	S107	S106	C149-C151 2d harmonic tuning	R117	13 mc	L116	L118

Band	Frequency	S101	S102	S103	S104	S105	S106	S107	S108		S109	S110	S111
									A	B			
25	24.5 to 25.5	C238	C230	L106	L109	L113	S107	S106	C148 2d harmonic tuning	R117	14 mc	L116 L117	L118 L119
26	25.5 to 26.5	C238	C230	L106	L109	L113	S107	S106	C148 2d harmonic tuning	R117	14 mc	L116	L118
27	26.5 to 27.5	C2382	C230	L106	L109	L113	S107	S106	C147 3d harmonic tuning	R117	10 mc	L116 L117	L118 L119
28	27.5 to 28.5	C238	C230	L106	L109	L113	S107	S106	C147 3d harmonic tuning	R117	10 mc	L116	L118
29	28.5 to 29.5	C238	C230	L106	L109	L113	S107	S106	C146 3d harmonic tuning	R117	10.6 mc	L116 L117	L118 L119
30	29.5 to 30.5	C2382	C230	L106	L109	L113	S107	S106	C146 3d harmonic tuning	R117	10.6 mc	L116	L118

56. General Description

The receiver is tuned by the movement of powdered iron cores (permeability tuning) in the rf, variable if, and vfo coils. Movement of the cores is controlled by cams (except for vfo coils) which are turned through gearing by the KILOCYCLES and MEGACYCLES dial knob on the front panel. Band changing is accomplished by turning the r-f, i-f, and crystal switches through gearing from the BAND CHANGE knob. In addition, the BAND CHANGE knob moves the cores in the r-f coils through successive 1-mc increments (using the same cams as are used for tuning). Details of the functioning of these mechanisms, and the means of frequency indication are given in the following paragraphs of this section (figs. 30 and 42).

57. Tuning Mechanisms

The i-f and r-f racks are positioned by their cams through the gearing of shafts A, B, C, D, and E, from the KILOCYCLES dial knob. Shaft A is turned directly by the knob and is limited to 10 revolutions by the 10-turn stop mounted on the shaft. Each revolution corresponds to 100 kc. Shaft A also turns a lead screw in the vfo which positions the core of coil L001 (fig. 42). Shaft B makes only one-tenth of a turn for each turn of shaft A, and thus can make only one complete revolution because A is limited to 10 turns.

a. I-F Rack. Shaft E is geared to shaft B through the 74-tooth gear and the detent gear, both of which act as idlers. Shaft E makes almost a full turn, and thus lifts the i-f rack from the lowest to the highest position during the complete turn of shaft B.

b. R-F Racks. Shaft D is geared to shaft B through shaft C, and the 16- and 41-tooth gears (fig. 30). The gearing ratio (48 to 48) is such that shaft C turns exactly as much as shaft B. The 41-tooth gear serves as an idler gear to transmit motion and change the direction of motion. Shaft D makes four-thirty-fifths of a turn for the complete turn of shaft B. Since only a half-turn of the heart-shaped cams is required to lift the r-f racks from their lowest to their highest positions, and since somewhat less than the full travel is used, this four-thirty-fifths of a turn corresponds to exactly one-fourth of the full movement for the 4- to 7-mc rack. That is, it corresponds to a 1-mc movement. The cam for the 8- to 15-mc rack turns only half as far as the first cam and, therefore, lifts the 8- to 15-mc rack only one-eighth of the full rack movement, or also 1 mc, for the same full turn of shaft C. Similarly, the cam for the 16- to 30-mc rack turns only half as far as the cam for the 8- to 15-mc rack and therefore lifts the 16- to 30-mc rack only one-sixteenth of the full rack movement, or 1 mc, for a full turn of shaft C. Thus, regardless of which set of coils may be connected in the circuit, that is, whatever tuning step the receiver is set to, the turning of shaft C one full turn always corresponds to an r-f rack movement proportional to 1 mc. Turns less than a full turn are also in exact proportion.

58. Band Change Mechanisms

a. R-F Racks. The cams for the r-f racks are turned for band changing purposes by means of shaft D, shaft C, and the two sets of sun and planet gears which are used for tuning. However, shaft B does not turn; instead, the planet gears are caused to *walk* around the sun gears by turning the spider gear in which the shaft of the planet gears is mounted. The spider gear is turned, through an idler, by the 85-tooth gear on the shaft of the BAND CHANGE knob. Every half-turn of the BAND CHANGE knob causes the spider gear to turn one-half revolution. This makes the planet gears *walk* halfway around their respective sun gears. As both planet gears are fixed to the same shaft, and as the 50-tooth sun gear does not turn when the KILOCYCLES dial knob is stationary, the 30-tooth sun gear is thereby caused to rotate exactly one full turn for each half turn of the spider gear. Shaft C is thus rotated one full turn (the same as if shaft B had been turned a full turn) and the cams for the r-f racks are moved precisely the right amount for 1 mc. To summarize, shaft C can be turned by *either* the

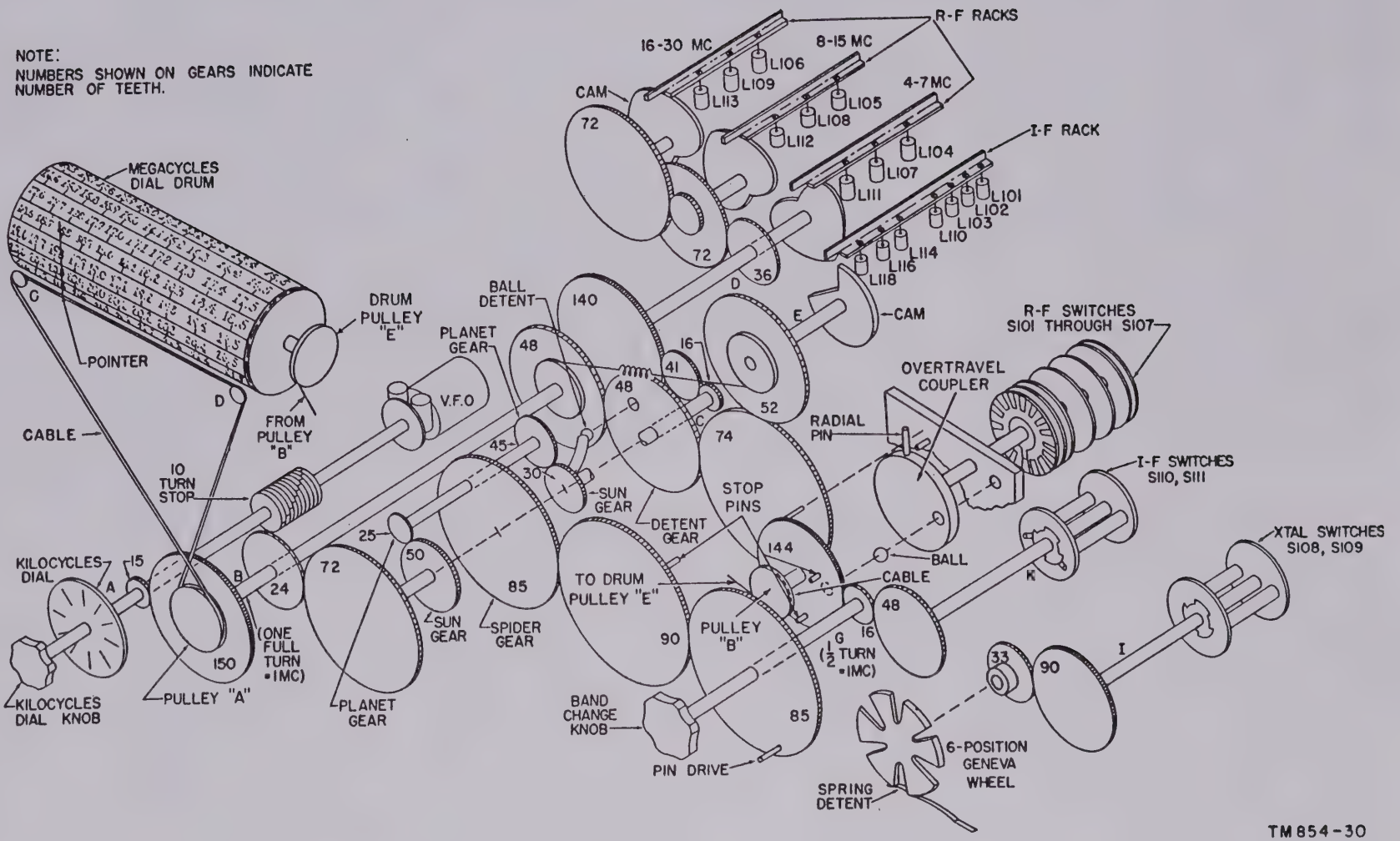

Figure 30. Functional diagram of tuning, band changing, and frequency indicating mechanisms.

BAND CHANGE knob and the spider gear or by the KILOCYCLES dial knob and shaft B.

b. Detent. In order to insure that the BAND CHANGE knob is turned only in half-revolution steps, a ball detent is provided between the 30-tooth sun gear (which makes one full turn per half turn of the knob) and the detent gear. (Note that the detent gear cannot turn when the KILOCYCLES dial knob is stationary).

c. I-F Racks. Note that turning the BAND CHANGE knob does not affect the position of shaft E and variable i-f rack. Shaft E turns only when the detent gear is turned, and the detent gear can be turned only through shaft B and the KILOCYCLES dial knob. Thus band changing does not affect the tuning of the i-f coils.

d. R-F Switches. R-f switches S101 through S107 are 18-position rotary switches of which only the first 16 positions are used. Of the 16 operative positions, one each is used for tuning steps 1 through 15, while the sixteenth position is used for all 15 remaining tuning steps. The position of the r-f switches is controlled by the BAND CHANGE knob through the 16- and 144-tooth gears, each half-turn of the knob causing a one-position shift of the switches until position 16 is reached. To prevent further turning of the BAND CHANGE knob from moving the switches beyond position 16, an overtravel coupler is interposed between the 144-tooth gear and the switches. The coupler permits the knob and associated gears to be turned beyond tuning step 16, to tuning step 30, and at the same time leaves the switches stationary at position 16. The coupler is driven by the detented ball held between it and the 144-tooth gear. The coupler thus follows the gear to each of the first 15 positions until, at position 16, the pin on the periphery of the coupler is arrested by the stationary stop pin, making only the gear free to move to the higher positions. When returning to the lower numbered tuning steps, the pin on the gear again engages the pin on the coupler at position 16, so that the gear can drive the coupler and switches to the lower tuning step positions.

e. Crystal Switches. The crystal switches S108 and S109 are 18-position switches, of which only the first 16 positions are used, and are operated so that each position is used for two tuning steps. The switches are turned by the BAND CHANGE knob through the Geneva wheel and shafts H and I. The Geneva wheel makes one-sixth of a turn each time it is engaged by the drive pin on the 85-tooth gear attached to the shaft of the BAND CHANGE knob. Since this occurs only once each full turn of the knob, and since each half-turn of the knob equals a 1-mc tuning step change, the switches are turned one position only once every two tuning steps.

f. I-F Switches. I-f switches S110 and S111 are rotary switches, having two positions, with every other position electrically the same. These switches are turned one position for each half-turn of the BAND CHANGE knob, by means of shafts G and K.

59. Frequency Indication

The tuned frequency of the receiver is shown on two dials which must be read in combination. The KILOCYCLES dial which shows the *units* and *tens* figures of the frequency in kilocycles is turned directly by the tuning knob on the end of shaft A. The *hundreds* and *thousands* figures of the frequency in kilocycles are located on a slide rule type scale on the MEGACYCLES dial drum and are actually marked in decimal and unit megacycles. The pointer which indicated these figures is moved by a cable and pulley on shaft B which is turned by the main tuning knob. The scales on the MEGACYCLES dial drum extend over a range of 1 mc only and 30 scales are thus needed to cover the full frequency range of the receiver. The proper scale on the drum is turned into viewing position by means of a cord and pulleys which are turned by the BAND CHANGE knob, each half-turn of the knob causing another scale to come into view.

Figure 80. Functional diagram of tuning, band changing, and frequency indicating mechanisms.

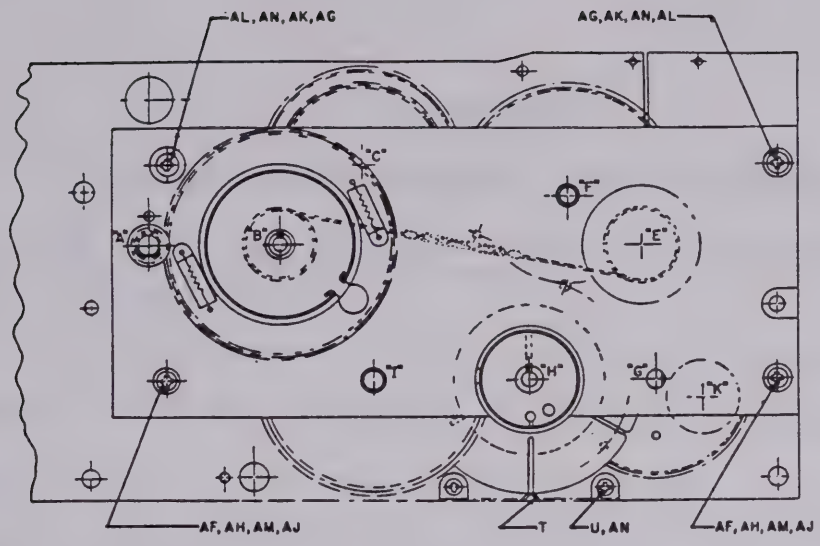

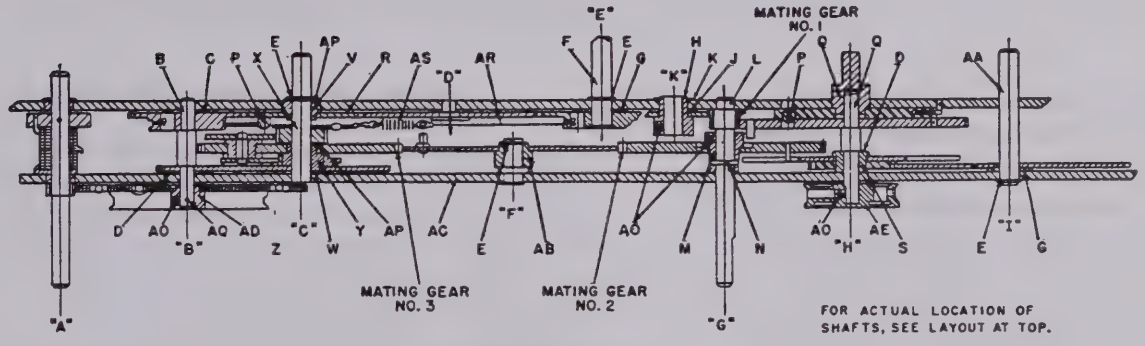

CROSS-SECTIONAL VIEW

SHAFT "A"	SHAFT "E"	SHAFT "A"	SHAFT "E"
0	0	2 + 270°	91° 23'
0 + 90°	8° 18'	3	99° 42'
0 + 180°	16° 37'	3 + 90°	108°
0 + 270°	24° 55'	3 + 180°	116° 18'
1	33° 14'	3 + 270°	124° 37'
1 + 90°	41° 32'	4	132° 55'
1 + 180°	49° 51'	4 + 90°	141° 14'
1 + 270°	58° 9'	4 + 180°	149° 32'
2	66° 28'	4 + 270°	157° 51'
2 + 90°	74° 46'	5	166° 9'
2 + 180°	83° 5'	5 + 90°	174° 28'

SHAFT "A"	SHAFT "E"	SHAFT "A"	SHAFT "E"
5 + 180°	182° 46'	8 + 90°	274° 9'
5 + 270°	191° 5'	8 + 180°	282° 28'
6	199° 23'	8 + 270°	290° 46'
6 + 90°	207° 42'	9	299° 5'
6 + 180°	216°	9 + 90°	307° 23'
6 + 270°	224° 18'	9 + 180°	315° 42'
7	232° 37'	9 + 270°	324°
7 + 90°	240° 55'	10	332° 18'
7 + 180°	249° 14'	10 + 90°	340° 37'
7 + 270°	257° 32'	10 + 180°	348° 55'
8	265° 51'	10 + 270°	357° 14'

POSITION OF SHAFT "A" GIVEN IN NO. OF TURNS PLUS DEGREES FROM CCW STOP. SHAFT "E" MUST POSITION WITHIN 27' OF ITS SPECIFIED FIGURE FOR EACH INCREMENT OF ROTATION ON SHAFT "A". SETTINGS ON "A" (EXCEPT END POSITIONS) TO BE APPROACHED IN BOTH CW AND CCW DIRECTIONS.

QUANTITY	ITEM NO.	PART NAME
1	A	BACK GEAR PANEL
1	B	REV. GEARS AND SHAFT ASSEMBLY
1	C	WASHER
2	D	WASHER
4	E	RETAINING RING I
1	F	I.F. DRIVER GEAR AND SHAFT ASSY
2	G	WASHER
1	H	GEAR ASSEMBLY - SWITCH I.F.
2	J	WASHER
1	K	RETAINING RING
1	L	MC KNOB SHAFT
1	M	KNOB GEAR AND HUB ASSEMBLY
1	N	GROOVE PIN
1	O	SHAFT ASSEMBLY - BAND SWITCH

QUANTITY	ITEM NO.	PART NAME
2	P	BALL
1	Q	SHAFT ASSEMBLY - GENEVA WHEEL
1	R	THRUST BEARING
1	S	HUB ASSEMBLY - GENEVA WHEEL
1	T	CENTERING SPRING
2	U	6-32 X 1/8 PBH SCREW
1	V	HUB ASSEMBLY - DETENT GEAR
1	W	WASHER
1	X	DETENT SPRING ASSEMBLY
1	Y	CENTER PLANET - GEAR AND HUB ASSY
1	Z	HUB ASSEMBLY - FLOATING
1	AA	SHAFT AND GEAR ASSEMBLY
1	AB	STOP IDLER GEAR HUB ASSEMBLY
1	AC	FRONT GEAR PANEL
1	AD	POINTER PULLEY ASSEMBLY

QUANTITY	ITEM NO.	PART NAME
1	AE	PULLEY - DRUM
2	AF	POST - LOWER SPACING
2	AG	POST - UPPER SPACING
4	AH	SCREW, 8-32 X 5/16
4	AJ	WASHER, NO. 8 FLAT
4	AK	6-32 X 1/4 SCREW
4	AL	WASHER, NO. 6 FLAT
4	AM	WASHER, NO. 8 SHAKE
6	AN	WASHER, NO. 6 SHAKE
6	AO	SET SCREW, 6-40 X 1/8
4	AP	WASHER
1	AQ	GROOVE PIN
2	AR	LOADING CABLE
1	AS	SPRING

NOTE:
DESIGNATION OF PARTS CONFORMS TO MANUFACTURER'S ASSEMBLY DRAWING 505 2189 004.

TM 854-31

Figure 31. Dial and band-switch gear box.

CHAPTER 5

FIELD MAINTENANCE INSTRUCTIONS

Note. This chapter contains information for field maintenance personnel. The amount of repair that can be performed by units having field and depot maintenance responsibility is limited only by the tools and test equipment available, and by the skill of the repairman.

Section I. TROUBLE SHOOTING AT FIELD MAINTENANCE LEVEL

Warning: Be extremely careful when servicing the receiver; dangerous high voltages are present. When checking voltages, use probes that are completely insulated except for the tip. Observe polarities to protect the meter. Take no continuity readings unless the receiver power is removed. Discharge capacitors before checking.

60. Trouble-Shooting Procedures

a. The first step in servicing a set is to attempt to sectionalize the fault. Sectionalizing means tracing the fault to the major component, circuit, or stage in the receiver responsible for abnormal operation of the set. The second step is to localize the fault. Localization means tracing the fault to the defective part responsible for the abnormal condition. Some troubles such as burned-out resistors, r-f arcing, and shorted transformers can be located by sight, smell, or hearing. The majority of faults must, however, be localized by checking the voltage and resistance.

b. The tests listed below aid in isolating the source of trouble. To be effective, the procedure should be followed in the order given. Remember that servicing procedure should cause no further damage to the receiver. The service procedure is summarized as follows:

(1) *Visual inspection.* The purpose of visual inspection is to locate any visible trouble. This is best done by using a strong light or a flashlight in areas of shadow. Through this inspection alone the repairman may frequently discover the trouble or determine the stage in which the trouble lies. This inspection is valuable in avoiding additional damage to the receiver that might otherwise occur as a result of improper servicing, and in forestalling future failures.

(2) *Input resistance measurements.* These measurements prevent further damage to the receiver from possible short circuits. Since this test gives an indication of the condition of the filter circuits, its function can be considered as being more than preventive.

(3) *Operational tests.* The operational test is important because it frequently indicates the general location of the trouble. In many instances the information gained will determine the exact nature of the fault. In order to utilize this information fully all symptoms must be interpreted in relation to one another.

(4) *Trouble-shooting chart.* The trouble symptoms listed in this chart aid in localizing trouble.

(5) *Signal substitution.* The principal advantage of the signal substitution method is that it usually enables the repairman to localize the trouble accurately and quickly to a given stage when the general location of the trouble is not immediately apparent from other tests.

(6) *Stage gain charts.* These charts can be used to localize obscure, hard-to-find troubles and should be referred to only after having exhausted other means.

(7) *Intermittents.* In all these tests, the possibility of intermittents should not be overlooked. If present, this type of trouble often may be made to appear by tapping or jarring the set. It is possible that the trouble is not in the receiver itself but in the installation, or the trouble may be caused by external conditions. In this event, check the installation, if possible.

61. Trouble-Shooting Data

Take advantage of the material supplied in this manual. It will help in the rapid location of faults. Consult the following trouble-shooting data:

Fig. No.	Description
42	Radio Receiver R–388/URR, schematic diagram.
32	Tube socket voltage and resistance chart.
33	Radio Receiver R–388/URR, top view.
34	Radio Receiver R–388/URR, bottom view compartmented.
35	Bottom view of chassis, compartment 1, capacitors.
37	Bottom view of chassis, compartment 2.
38	Bottom view of chassis, compartment 3.
5	Radio Receiver R–388/URR, rear view.
36	Bottom view of chassis, compartment 1.

62. Test Equipment Required for Trouble Shooting

The test equipment required for trouble-shooting Radio Receiver R–388/URR is listed below. The technical manuals associated with the test equipment are also listed.

Test equipment	Publication
Signal Generator TS–497A/URR (range 2 to 400 mc).	TM 11–5030
Audio Oscillator TS–382A/U	TO 16–35TS382–2
Tube Tester I–177 and I–177–A	TM 11–2627
Frequency Meter Set SCR–211–(*) (range 125 kc to 20 mc).	TM 11–300
Frequency Meter TS–174B/U	TM 11–5044
Electronic Multimeter TS–505/U	TM 11–5511
Ballantine VTVM Model No. 300 Multimeter TS–352/U	TM 11–5527
Output Meter TS–585A/U	TM 11–5017

63. General Precautions

Careless replacement of parts can cause additional troubles. Observe the following points.

a. Before a part is unsoldered, note the position of the leads. If a part, such as a transformer, has many taps, tag each lead for correct identification.

b. Be careful not to damage other leads by pulling or pushing them out of the way.

c. Do not allow drops of solder to fall into the set as they may cause shorts. If possible, place strip of cardboard beneath part to be soldered to catch drippings. Be sure iron is hot, clean, and tinned.

d. A carelessly soldered connection may create a new fault and is extremely difficult to locate.

e. When a part is replaced in the r-f or i-f circuit, it must be placed exactly as the original one was. A part which has the same electrical value, because of a difference in physical size, may cause trouble in the higher-frequency circuits, where slight resistance and capacitance changes can cause erratic operation. Give particular attention to proper grounding when replacing a part. Use the same ground as in the original wiring. Burnish or scrape the ground area before attaching wire. Failure to observe these precautions may result in decreased gain or, possibly, in oscillation of the circuit.

64. Checking Filaments and B+ Circuits for Shorts

a. The filaments operate at 6.3 volts a-c from a l-v (low-voltage) winding on the secondary of power transformer T108. A short in the filament circuit would hardly cause damage to the filaments, unless of course, a short circuit occurred across the h-v and l-v windings of transformer T108. Before applying power, check the taps on the transformer. Visual inspection of the miniature tubes with the power turned on should show whether each is lighted. A continuity check of the filament pins of the tube will determine if the tube is at fault; otherwise, check the filament contact at the sockets for shorts.

b. Before applying power to a set known to be defective, it is advisable to check the B+ line for shorts. Be sure the power is removed

before checking for a short. The preferable check is to replace the plug-in filter can. A resistance reading at the terminals of filter choke L122 should read approximately 100 ohms. A resistance reading at the terminals of output filter choke L123 should read approximately 300 ohms. If the output filter choke reading is appreciably less than 300 ohms, remove filter capacitor unit C217 connections and check pins for breakdown before replacing filter choke.

c. Refer to tube socket resistance and voltage chart (fig. 32). With power removed, check resistances at pins against reading as outlined. Apply power and check voltages.

65. Operational Test

a. For rapid orientation with the operation of the receiver and for ready reference to the logical and usual sources of trouble, refer to the equipment performance checklist (par. 36).

b. Use of the receiver meter in either the input and output position with the avc off may be helpful in determining whether the trouble is located before the detector stage or following it.

L123 - 5H ≃ 300Ω (smaller physical size choke)
L122 - 3H ≃ 100Ω (larger " " ")

1-800-422-3881

NOTES:

ALL MEASUREMENTS TAKEN FROM SOCKET PINS TO GROUND, RESISTANCE MEASUREMENTS TAKEN WITH NO AC INPUT, BUT POWER SWITCH ON.
GAIN CONTROLS ARE ON FULL, AVC IS ON.
ALL OTHER SWITCHES ARE OFF UNLESS OTHERWISE NOTED.
VOLTAGE MEASUREMENTS TAKEN WITH 115V AC INPUT, POWER SWITCH ON, BUT NO INPUT SIGNAL.
RF GAIN FULL ON, AUDIO GAIN OFF, AVC ON.
ALL OTHER SWITCHES ARE OFF UNLESS OTHERWISE NOTED.
VOLTAGES MEASURED WITH ELECTRONIC VOLTMETER, 11 MEGOHMS INPUT RESISTANCE.
ALL VOLTAGES EXCEPT HEATERS ARE D.C.
NC MEANS NO CONNECTION.

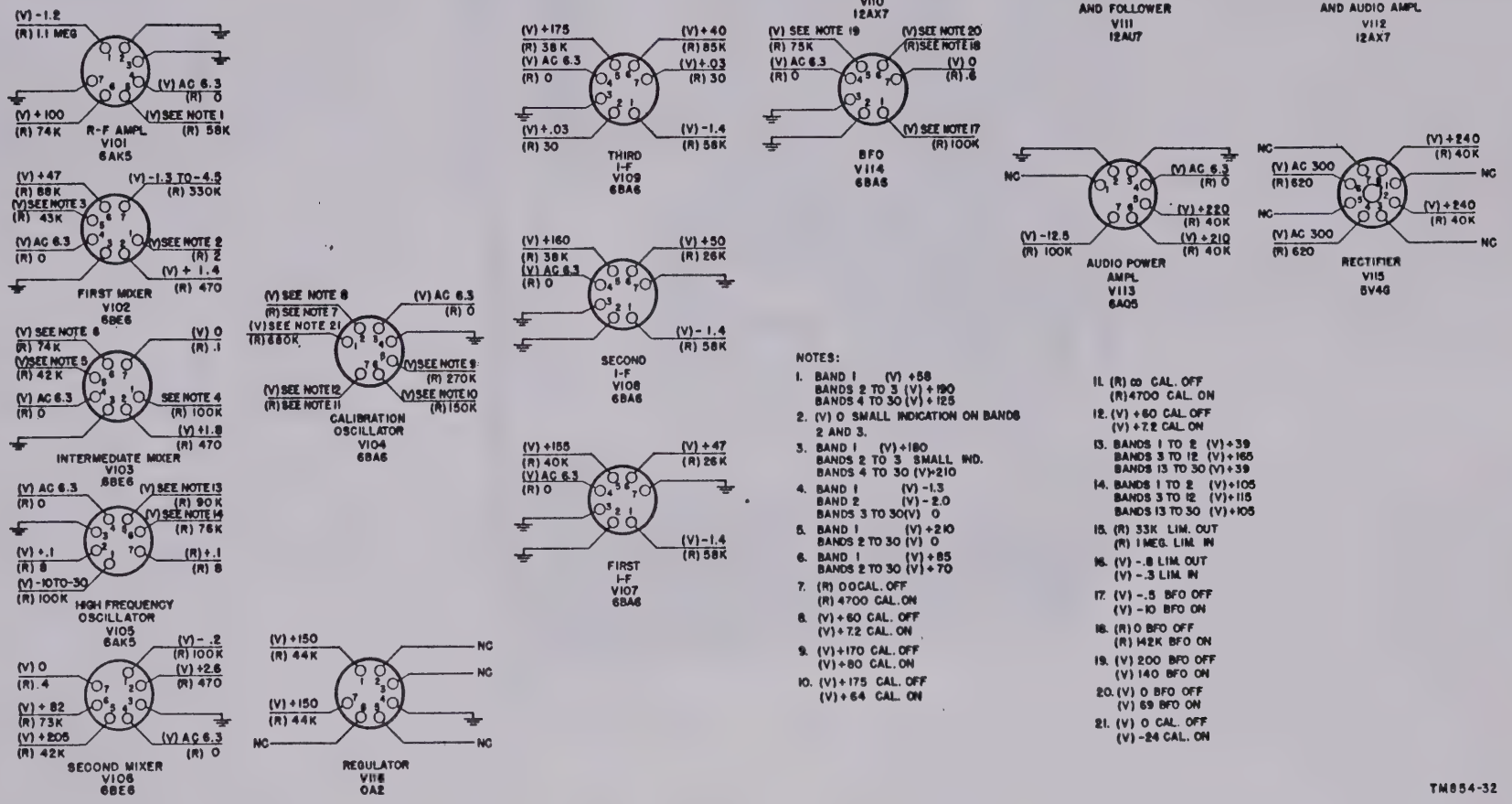

NOTES:

1. BAND 1 (V) +58
   BANDS 2 TO 3 (V) + 190
   BANDS 4 TO 30 (V) + 125
2. (V) 0 SMALL INDICATION ON BANDS 2 AND 3.
3. BAND 1 (V) +180
   BANDS 2 TO 3 SMALL IND.
   BANDS 4 TO 30 (V) +210
4. BAND 1 (V) -1.3
   BAND 2 (V) - 2.0
   BANDS 3 TO 30 (V) 0
5. BAND 1 (V) +210
   BANDS 2 TO 30 (V) 0
6. BAND 1 (V) +85
   BANDS 2 TO 30 (V) +70
7. (R) 0 CAL. OFF
   (R) 4700 CAL. ON
8. (V) +60 CAL. OFF
   (V) +7.2 CAL. ON
9. (V) +170 CAL. OFF
   (V) +80 CAL. ON
10. (V) +175 CAL. OFF
    (V) +64 CAL. ON
11. (R) ∞ CAL. OFF
    (R) 4700 CAL. ON
12. (V) +60 CAL. OFF
    (V) +7.2 CAL. ON
13. BANDS 1 TO 2 (V) +39
    BANDS 3 TO 12 (V) +165
    BANDS 13 TO 30 (V) +39
14. BANDS 1 TO 2 (V) +105
    BANDS 3 TO 12 (V) +115
    BANDS 13 TO 30 (V) +105
15. (R) 33K LIM. OUT
    (R) 1 MEG. LIM. IN
16. (V) -.8 LIM. OUT
    (V) -.3 LIM. IN
17. (V) -.5 BFO OFF
    (V) -10 BFO ON
18. (R) 0 BFO OFF
    (R) 142K BFO ON
19. (V) 200 BFO OFF
    (V) 140 BFO ON
20. (V) 0 BFO OFF
    (V) 69 BFO ON
21. (V) 0 CAL. OFF
    (V) -24 CAL. ON

TM854-32

Figure 32. Tube voltage and resistance chart.

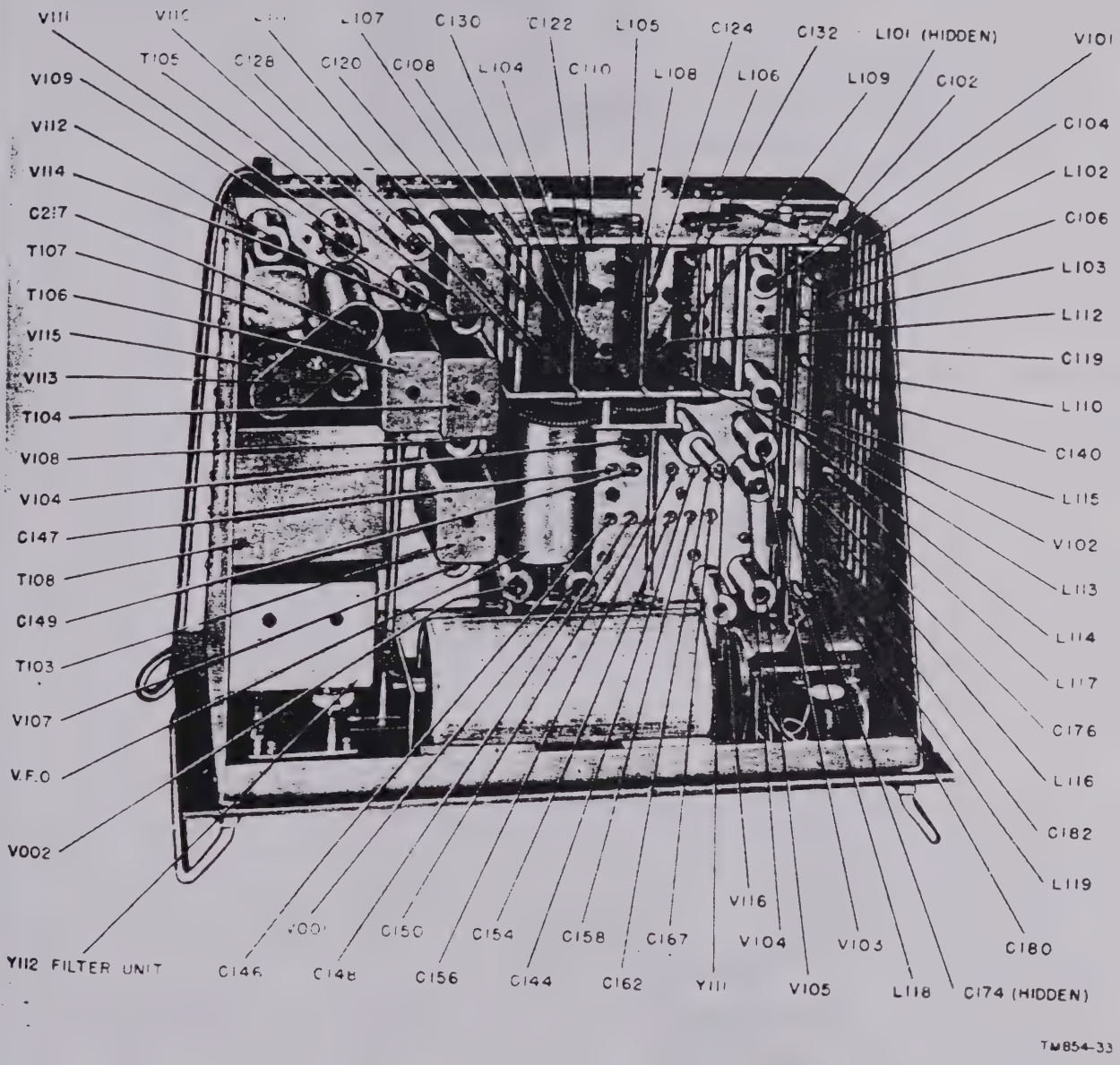

Figure 33. Radio Receiver R–388/URR, top view.

Figure 32. Tube voltage and resistance chart.

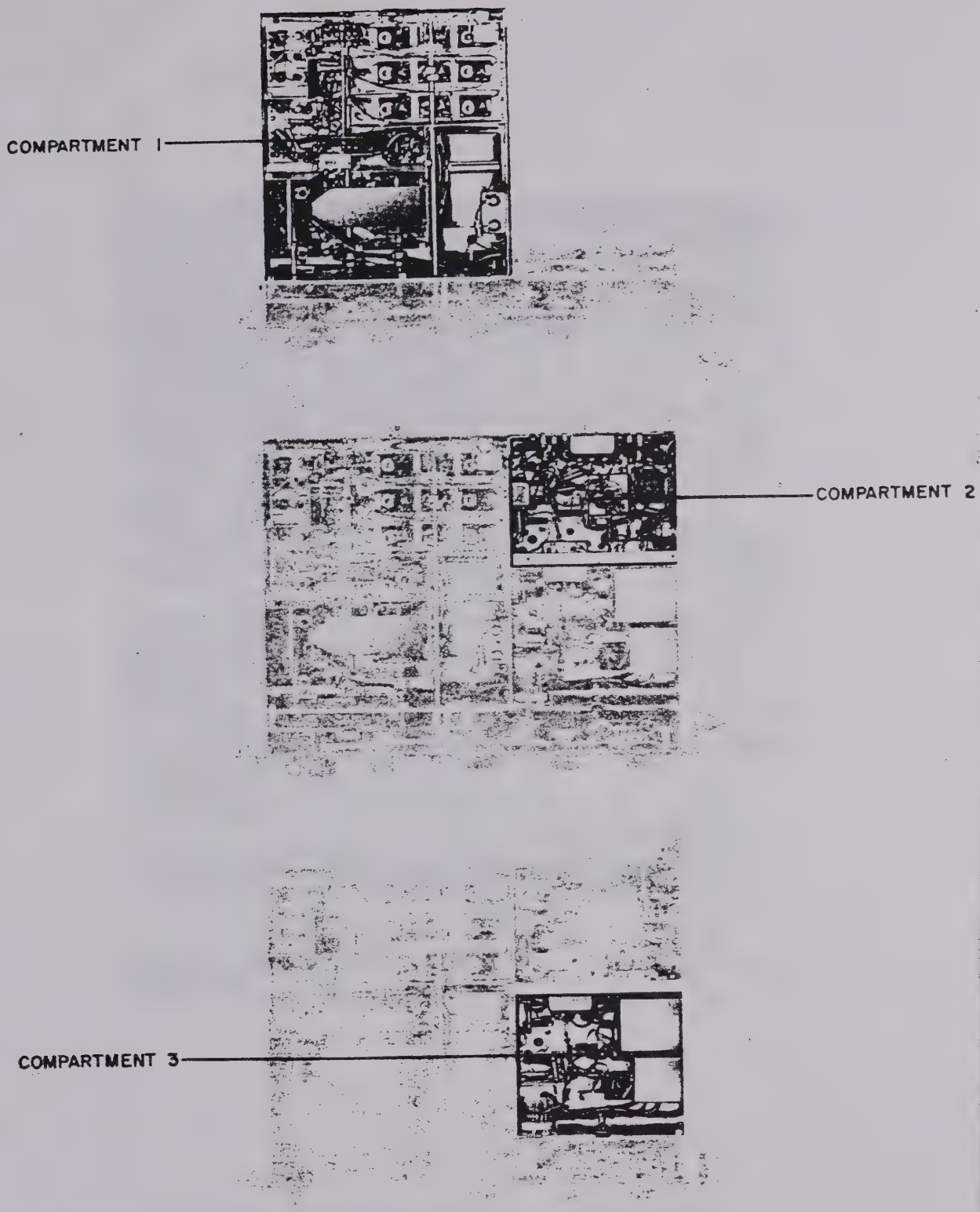

TM 854-34

Figure 34. Bottom view of chassis, compartmented.

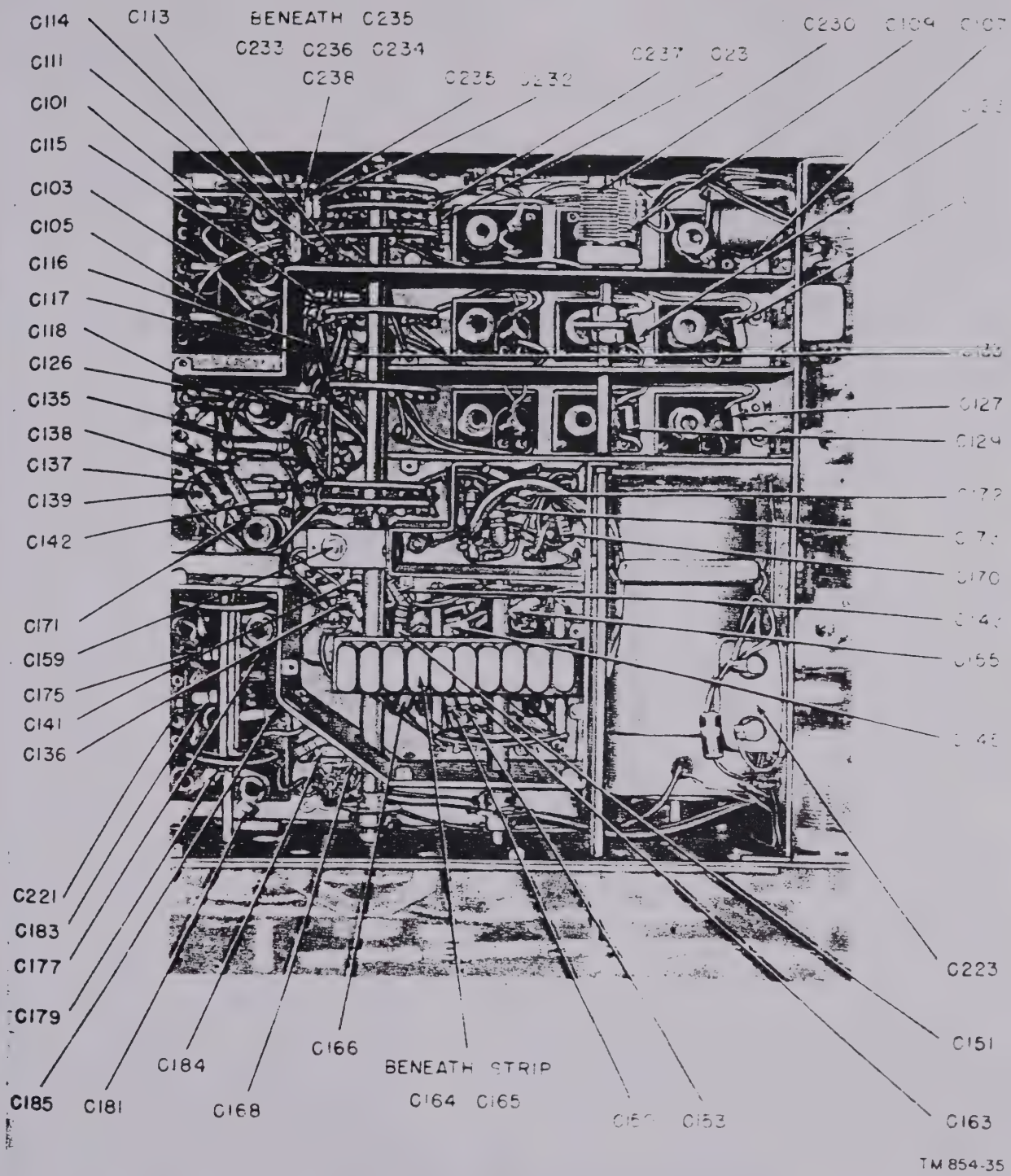

Figure 35. Bottom view of chassis, compartment 1, capacitors.

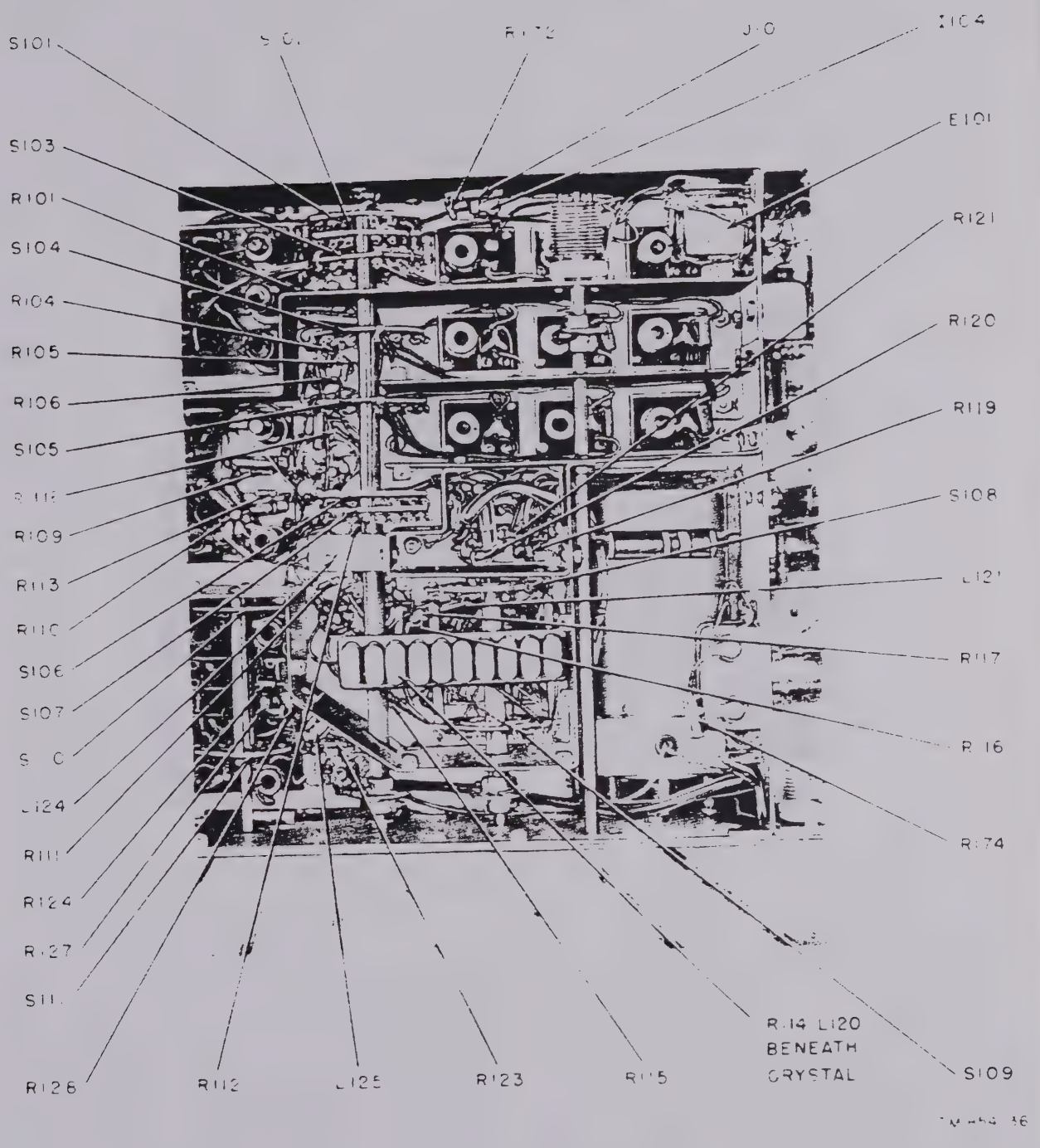

Figure 36. Bottom view of chassis, compartment 1.

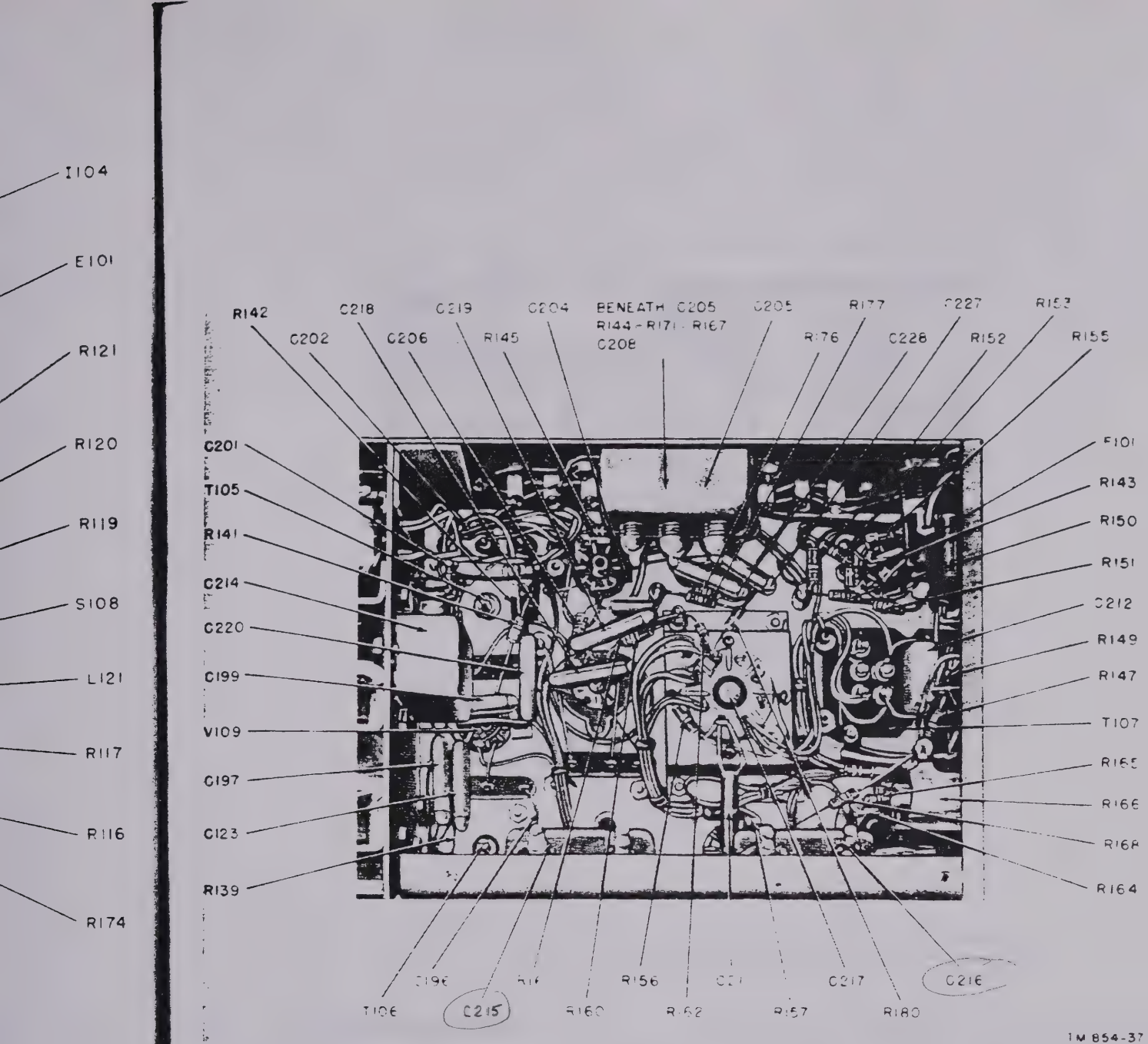

Figure 37. Bottom view of chassis, compartment 2.

AGO 3261A

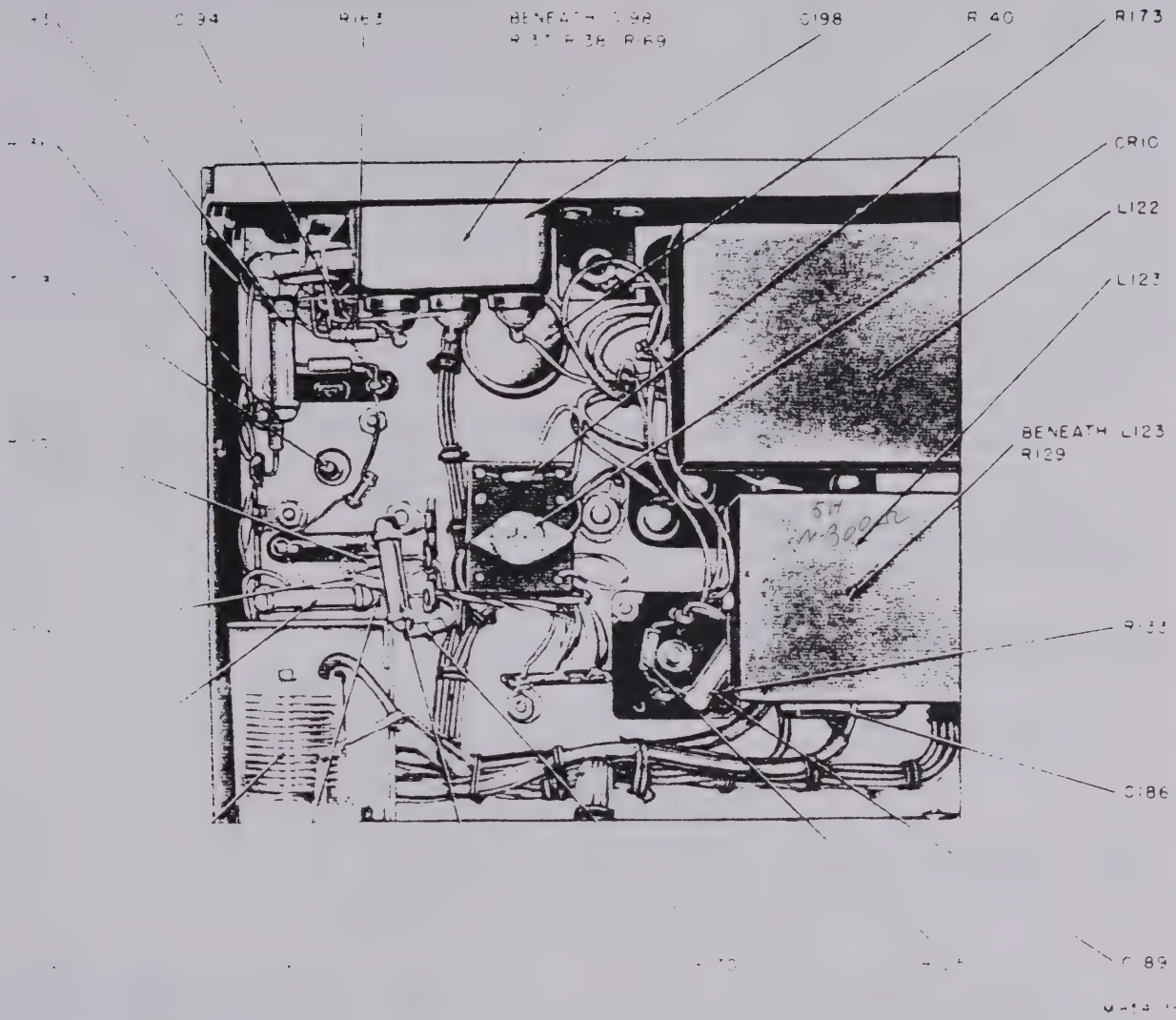

Figure 38. Bottom view of chassis, compartment 3.

66. Trouble-Shooting Chart

The following chart is supplied as an aid in locating trouble in the receiver. This chart lists the symptoms which the repairman observes, either visually or audibly, while making a few simple tests. The chart also indicates how to localize the trouble quickly to the various stages. The signal substitution tests (par. 68) then can be used to supplement this procedure and to determine the defective stage. Once the trouble is localized to a stage or circuit, a tube check and voltage and resistance measurement of this stage or circuit should ordinarily be sufficient to isolate the defective part. Normal voltage and resistance measurements are given in figure 32.

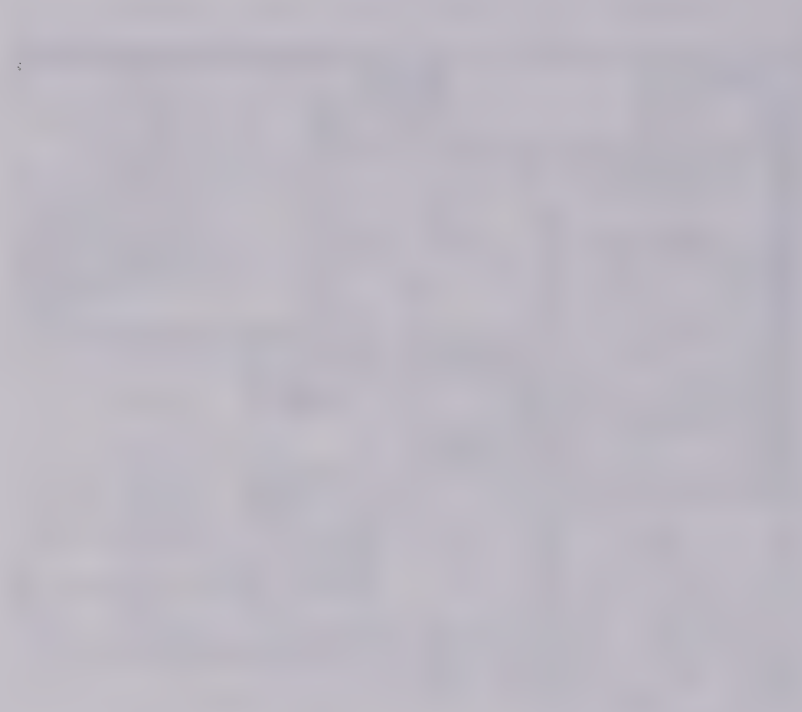

Symptom	Probable trouble	Correction
1. OFF-STANDBY-ON switch at ON position. Receiver inoperative, dial lamps do not light.	No line power.	Check power source.
	Blown fuse.	Replace fuse. If replaced fuse blows, check filter capacitor plug-in unit C217.
	Break in a-c cord, usually at plug end or where cord enters set.	Check cord for continuity, banding cord every few inches while watching ohmmeter for needle deflections.
	Crack in fuseholder or holder leads disconnected.	Check fuseholder and leads. Make repairs.
2. No receiver output with RF GAIN and AUDIO GAIN set at 10. Signal input indicated by meter with switch in INPUT position. No output from receiver.	Trouble lies in stages after second intermediate frequency.	Check tubes V109, V110, V111, V112, and V113.
		Check transformers T104, T105, and T107 for open circuits.
		Check capacitors C211 and C209 by replacing with capacitor of equal value.
		Check resistances R152 and R153.
		Check AUDIO GAIN control R154.
3. Receiver inoperative. Meter does not respond as receiver is tuned. Dial lamps light.	Rectifier tube V115 defective, chokes L122 and L123 open, filter capacitor plug-in unit C217 shorted.	Replace tube and/or chokes. Replace filter capacitor unit.
	Defect exists between antenna terminal and detector stage V110.	Check tubes V101 through V109. Check continuity, primary and secondary of transformers T105, T104, T103, T102, T101.
		Check continuity of L116, L117, L118, and L119 with the BAND CHANGE switch on the odd and even tuning steps.
	Trouble may occur in the switching. Try tuning on each band to determine whether the entire set is inoperative, one particular band, or variable i-f switches S110 and S111.	Refer to mechanical trouble-shooting data (par. 67).
	With CALIBRATE and BFO switches ON and the main tuning dial turned through 100 kc, and oscillatory note is heard at the output of the receiver.	Antenna relay K101 defective. Repair or replace.
4. A-m signals received but no c-w apparent at output with BFO switch ON and the set tuned to a c-w station.	Bfo defective.	Replace tube V114.
		Check bfo coupling capacitor C206.
		Check socket resistances and voltages against figure 32.
		Check T106 unit.
5. With CALIBRATE switch ON, and receiver tuned to WWV, no oscillatory note is heard at output.	Calibration oscillator defective.	Check tube V104.
		Check capacitor C111 and C173.
		Check switch S118.
		Check voltages and resistances at socket of V104 against figure 32.
		Check plug-in crystal Y111.
6. Reception weak. With no signal tuned in, rushing noise is not apparent at output, when AUDIO GAIN and RF GAIN controls are rotated through maximum. CRYSTAL FILTER switch at 0 position.	Poor antenna hook-up matching.	Tighten antenna connections. Check for grounds. Adjust ANT. TRIM control.
	Weak tubes particularly the rectifier, V115.	Check tubes. If receiver has been operated constantly over a long period, replace entire tube set.

Symptom	Probable trouble	Correction
7. With a station tuned in, receiver output is low. Meter appears sluggish.	Low plate or grid voltage caused by shorted capacitor in plate or screen return circuits.	Check voltages and resistances at sockets against figure 32.
	Receiver not properly alined.	Realine as outlined in paragraphs 80–94.
8. Reception distorted.	Open grid resistor in audio stage V113.	Check voltages and resistances at sockets against figure 32.
	Incorrect grid biases.	Check terminal 10 (h-v winding center tap) on secondary of power transformer T108 for high-resistance connection. Repair. Check grid voltages against chart number with AVC control at OFF. RF GAIN control R148 open or shorted.
	Poor output impedance match.	Check secondary taps of transformer T107 and speaker connections.
	Improper operating potentials.	Check tube voltages against chart number.
		Check filter chokes L122 and L123 for shorted turns, and filter capacitor C217 for excessive leakage.
	Leaky screen bypass and plate decoupling capacitors.	Replace bypass capacitors with good capacitors of equal value.
	1,250–kc heterodyne.	Adjust L124 (par. 94).
		Check grid return resistors in mixers.
	Strong signal with AVC control at OFF.	Reduce RF GAIN control, R148 setting.
9. Noise and fading signals.	Faulty RF GAIN and AUDIO GAIN controls.	Tune to station. First short AUDIO GAIN, then short RF GAIN control. If signals become stable under either one of these procedures, or noise is produced, a defective control is indicated and should be replaced.
	Swinging antenna.	Reduce sag in antenna. Tighten connections.
10. Hum at output.	Short turns in filter chokes L122 and L123.	Check resistance of chokes L122, 100 ohms; L123, 300 ohms.
	Defective filter capacitor unit C217.	Replace plug in unit.
11. Intermittent noise.	Defective tube, resistor, or capacitor.	With an insulated probe, gently tap and slightly move all tubes, resistors, capacitors, and soldered connections to locate loose elements in tubes or faulty connections.
12. Whistle or howl in receiver.	Defective tube, poor shielding and grounding.	Check tubes. Shunt bypass capacitors with capacitors of equal value to locate open unit.

67. Mechanical Trouble-Shooting Data

Failure of the receiver to operate properly often may be caused by mechanical faults. Some of the more probable mechanical sources of trouble are listed in the following table. See paragraphs 74–79 for repair instructions.

Symptom	Probable trouble	Correction
1. No detenting of bands takes place when BAND CHANGE knob is turned.	Ball and detent-spring assembly (on shaft C, fig. 30) bent or broken.	Repair or replace detent-spring assembly.
2. BAND CHANGE knob turns only one revolution, and then jams.	Centering spring for Geneva wheel loose, bent, or broken.	Tighten, repair or replace spring.
3. Receiver will not tune on some or all frequencies.	Cam rider for r-f slug rack or i-f slug rack stuck because of broken spring or dirty guide.	Clean and replace parts as required.
4. Turning BAND CHANGE knob causes wrong bands to be tuned in.	Overtravel coupler out of alinement.	Realine band-change mechanism.
5. Too much backlash occurs when reversing direction of tuning with KILOCYCLES dial knob.	Broken loading cord between shafts B and E (fig. 31).	Replace loading cord.
6. Band indicator drum does not turn.	Broken drum-drive cord.	Replace cord.
7. Dial pointer does not move.	Broken pointer cord.	Replace cord.

68. Signal Substitution Notes

a. Signal substitution requires a source of audio, i-f, and r-f signals. See paragraph 62 for a listing of suitable test equipment.

b. In addition, a headset or permanent magnet speaker is necessary.

c. A tube tester and voltohmmeter are needed also to isolate the defective part after the faulty stage has been indicated by signal substitution.

d. In the test indicated in the following paragraphs, ground one side of the signal generator to the receiver chassis and connect the other side through a series capacitor (about .05 μf) to the receiver point as directed.

e. Note the volume and listen for serious distortion from the speaker or head set at various points in the signal substitution procedure. When working back from the output toward the input stages, decrease the output as much as possible. If possible, compare with a receiver known to be in good condition.

f. Check the wiring and soldering in each stage during the procedure.

g. Misalinement of one or more stages in the receiver will cause reduced output. Misalinement of the oscillators, except the bfo, may prevent any output.

h. When trouble is localized to a given stage, first test the tube, then the voltage, and finally the resistance at the tube socket of that stage against figure 32.

i. Trouble in a circuit or stage may not cause changes in voltages or resistance measurements at the tube sockets. The instructions included in these paragraphs are merely a guide and should suggest other procedures, such as voltage and resistance measurements on individual parts, or any other tests that may be in order.

j. Remove only one tube at a time when testing. Check the tube, and if it is not defective, return it to the proper socket before another tube is removed.

k. At each step, it is assumed that all previous steps were completed satisfactorily. Isolate and repair any troubles located before proceeding further.

69. A-F Tests

a. Apply an audio signal through a .05-μf capacitor to terminal 7 of V113. Listen for a signal at the headset. If no output signal is apparent, check tube V113 and taps of transformer T107. Check contacts at PHONES jack J103.

b. Apply an audio signal at tap 3 of the secondary of transformer T105. If no signal is audible at the output, check in turn, V112, AUDIO GAIN control R154, capacitor C209, and resistors R150, R152, and R153. Check the socket voltages of V112 and V113.

70. Fixed I-F Tests

For fixed i-f tests, set the controls as follows:

RF GAIN	Maximum.
AUDIO GAIN	Maximum.
BFO	OFF.
AVC	OFF.
LIMITER	OFF.
CRYSTAL FILTER SELECTIVITY.	0.

a. Apply a 500-kc modulated signal through a .05-μf capacitor to the plate (pin 5) of V109. The signal should be heard in the phones. If the signal is not heard, check the continuity of primary and secondary of transformer T105. Check capacitor C201.

b. Apply the 500-kc modulated signal to the grid (pin 1) of V109. The output signal should be louder. If not, check the voltage and resistance at the pins to determine the cause.

c. Repeat the procedure as outlined above with V108 and V107. Decrease the signal with each tube.

d. Apply the modulated 500-kc signal to the plate (pin 5) of V106. If no signal is heard at the output, check T101 for continuity.

71. Variable I-F Tests

a. Tune the receiver through its range on the odd- and even-numbered tuning steps. Notice the output.

b. If it is apparent that the receiver is not functioning properly only on the odd-numbered bands, check inductors L117 and L119 and capacitor C221.

c. If received signals develop insufficient or no output on the even-numbered bands, check inductors L116 and L118 and capacitor C220.

d. Check switches S110 and S111 on odd- and even-numbered tuning steps.

e. Refer to paragraphs 87 and 88, variable i-f alinement.

72. R-F Tests

a. The quickest r-f test and over-all check of the receiver can be made by using calibration oscillator V101. Turn the CALIBRATE switch to ON, the BFO switch to ON, and the RF GAIN and AUDIO GAIN controls at the halfway point (5). Revolve the main tuning knob across the spectrum of one of the lower bands. If a tone is heard at the harmonic frequencies of 100 kc throughout the tuning range, the receiver is operating. Defective r-f coils and capacitors can be detected by repeating this procedure over the 30 tuning steps. Also, faults in the switching can be brought to light.

b. If there is reason to suspect that the calibration oscillator is defective, an r-f modulated signal of known frequency can be applied to the grid (pin 1) of V101. If the set is operating properly, the signal should be audible at the output, and the main tuning control should read the correct frequency. A defective tuning step can be located by applying a modulated r-f signal from an accurately calibrated signal source.

73. Stage Gain Chart

The stage gain chart given in this paragraph lists the approximate input voltages required to produce a minimum of 500-mw signal output. Use these charts as standards when trouble shooting, to check the over-all gain of the receiver, and the gain of each stage listed below. When the receiver output is low and the tubes are performing in a satisfactory manner (as indicated by a tube checker), localize the defective stage by checking the signal voltage level of the stages against the chart, while using either the signal substitution or signal tracing method of trouble shooting.

a. Set the CALIBRATE, AVC, and BFO controls at OFF, and set the SELECTIVITY knob at 0. Increase the RF GAIN control setting until a reference voltage of 4 volts can be measured across the diode load resistor R151.

b. Allow 15 minutes for the signal generator to warm up. Ground the signal generator to the receiver chassis. Use short, well-shielded leads when applying signals. Feed the generator signals modulated 30 percent at 400 cycles through a 100-$\mu\mu$f capacitor and 50-ohm resistor.

Common Sense Press
Box 1544
Billings, MT 59103

3X #1

5814 V23 9A
12AU7 V15 9A
12AX7 V19 9A

Frequency	Signal generator output applied at	Signal generator output (microvolts)	Stage gain
500 kc	3d i-f V109, pin 1	53,000 = .053v	X 73.5 = 3.9v
500 kc	2d i-f V108, pin 1	1,500	35.5
500 kc	1st i-f V107, pin 1	27	55.5
2 or 3 mc	2d mixer V106, pin 7	29	.93
*11 mc	intermediate mixer V103, pin 7.	22	1.32
1 mc	1st mixer V102, pin 1	3	7.33
40 to 30 mc	1st mixer V102, pin 1	1.2 to 1.5	24 to 19.7
1 mc	r-f amplifier V101, pin 1	.3	10
2 to 30 mc	r-f amplifier V101, pin 1	.8 to 1.6	16 to 29

* Dial tuned to 1 mc.

Section II. REPAIR

74. Replacement of Parts

a. For the most part, the components of Radio Receiver R–388/URR are readily accessible and are easily replaced if found faulty. The sockets, capacitors, filter chokes, and inductors are mounted securely to the chassis with hexnuts and Phillips-head screws. The power transformer is bolted to the chassis. The bolts can be removed easily with socket wrenches, long-nosed pliers, and/or a Phillips screw driver. The dial knobs are removed with either of the wrenches mounted on the under side of the dust-cover. The crystal filter shield is lifted by removing one Phillips-head screw on top of the can and a hexnut beside the power transformer, beneath the receiver.

b. If any of the switch wafers require replacement, carefully mark the wires connected to the wafer with tags to avoid misconnection when the new switch is installed. Follow this practice whenever replacement requires the disconnection of numerous wires.

c. The parts that require special attention in their removal are listed in the following paragraphs.

75. Removal of VFO

a. When trouble occurs in the vfo unit, it is generally recommended that the entire unit be replaced. To begin this task, remove the V001 and V002 tube shields, then remove the tubes.

b. With the fluted socket type wrenches, remove the dial knobs listed below.

SELECTIVITY
PHASING
Main tuning
BAND CHANGE
ANT. TRIM
BFO PITCH

c. Remove the front panel by removing the 11 screws that secure the front panel, and unhook the 2 dial lamps over the MEGACYCLE dial drum and allow it to swing forward on wires.

d. Remove the KILOCYCLES dial.

e. Remove the three screws and spacers holding the oscillator to the chassis.

f. Tip rear of oscillator downward. Turn slightly to clear shaft, and lift out.

76. Tuning and Band-Change Gearing

a. General. Although the tuning and band-change gearing of the receiver can be removed as a complete unit, usually this is not necessary in order to make repairs. Almost all repairs can be made with the gears still in the receiver. Complete instructions for gaining access to the gearing, reassembling the gearing, and removing the entire gearing as a unit are given in the following subparagraphs.

b. Access to Gearing. Depending on the extent of repairs, the gear box may be removed from or left in the receiver. If the gear box is left in the receiver, perform steps 1, 2, and 3 only and proceed to *c* below for disassembly. If the gear box is to be removed from the receiver,

perform all of the following steps and those of *c* below.

(1) Turn the KILOCYCLE shaft to its counterclockwise stop and the MEGACYCLE shaft to its clockwise stop.

(2) Remove the SELECTIVITY, PHASING, BFO PITCH, BAND CHANGE, KILOCYCLE tuning, and ANT. TRIM knobs.

(3) Remove the collar, tension washer, and flat washer from the KILOCYCLE shaft. Remove the screws that fasten the front panel to the chassis. Lift off the panel, but do not detach it from the wiring to the chassis.

(4) Remove the end bracket from the right side of the chassis.

(5) Loosen the vfo, r-f slug, and i-f slug rack shaft coupler set screws which are accessible from the top of the receiver.

(6) Remove the two BAND CHANGE shaft coupler set screws which are accessible from the bottom of the receiver.

(7) Remove the vfo and gear box mounting screws.

c. Disassembly of Gearing.

(1) Turn shaft G (BAND CHANGE) clockwise to the stop below tuning step 1. Turn shaft A counterclockwise to the stop.

(2) Mark the mating gears which are referenced 1, 2, and 3 on figure 31. Make a mark across the 85-tooth spider gear and across the 90-tooth stop-pin gear (shaft F, fig. 31) using the top edge of the front gear panel for a guide.

(3) Make a radial mark on the 144-tooth gear below the Geneva wheel detent. Using the outline of the Geneva wheel as a template, make a mark on the 85-tooth Geneva wheel drive gear.

(4) Make a mark through the edge of the small dial cable pulley and the front gear panel.

(5) Extract the hub pin of the large dial cable pulley and remove the pulley and gear.

(6) Remove the small dial cable pulley and the retaining rings from shaft I and shaft F (fig. 31).

(7) Measure and note the length of the loading spring (AS, fig. 31).

(8) Remove the four front gear panel mounting screws. Remove the front gear panel, but do not allow the gears to unmesh, rotate, or ride up with the panel. Take care that the shim washers stay with their respective gears or shafts.

(9) Draw a line through the detent spring, the 48-tooth detent gear, and the rear gear panel. Draw another line through shaft E 52-tooth gear and the rear gear panel.

(10) Before removing any gears, mark all of them for identification. Note that the disk and gear of the overtravel coupler are detented. Do not lose the detent ball.

d. Reassembly of Gearing. The following instructions are given as a guide to the proper method of replacing parts. Apply a thin film of AN–G–25 or equivalent grease to all bearing surfaces when reassembling.

(1) *Loading cord.* When installing a new loading cord, cut the cord in half and tie a small loop in one end of each piece for attachment to the springs. To assemble, push the other end of each piece through the hole in the proper gear and knot it. The lengths of the cords (5 inches between knots) and the amount around each gear drum should be such that it will allow the stops on shaft A to operate before the spring strikes either gear drum. The spring is loaded to 6 pounds pull by disengaging a gear in the affected group, and winding the cord up on one of the gear drums. Coat the knots with Duco cement to prevent them from becoming untied.

(2) *Precautions in reassembling band-change gearing.* Observe the following precautions when reassembling the band-change gearing, shafts G and H.

(*a*) Place the centering spring so that it holds the slots in the Geneva

wheel in the path of the driving pin on the gear of shaft G.

(*b*) The radial pin on the overtravel coupler in the band-switch shaft assembly should be placed about 60° clockwise from the stop pin in the rear plate. After replacing ball, assemble Geneva-wheel shaft assembly, with the pin in the gear against the clockwise side of the radial pin.

(*c*) Use washers to shim shaft C so that a pull of 8 pounds minimum is required on the pin drive of shaft C for detent disengagement. These washers are shims which should be used on shafts C and H, respectively, in the quantity required to keep end play at a reasonable minimum.

(*d*) With shaft H assembled as explained, the two stop pins will be in the position shown in figure 31: one pin toward shaft E and the other 120° clockwise from it. The stop-idler gear should be rotated counterclockwise until its pin approaches the pin on shaft H as shown, with the ball detent on shaft C in its hole or detented position, and with the pin in the gear on shaft G directly under the shaft as shown in figure 30.

(*e*) Shaft G, when turned clockwise, must hit the stop after about 45° rotation. The ball on shaft C will then detent shaft G every 180°. When shaft G has rotated 7½ revolutions counterclockwise (or 15 detent positions), the pin in the gear on shaft H and the radial pin on band-switch shaft assembly, must have rotated clockwise until the radial pin is just touching or about to touch the pin in the rear plate. Further rotation of shaft G should cause the pin in the gear to leave the radial pin arrested by the pin in the rear plate. If the stop pins hit before 15 detent positions are made, readjust the mating of the gears. Shaft G must be able to rotate a minimum of 14½ revolutions (29 detent positions) (figs. 30 and 31).

77. R-F Slug Rack

a. General. Except for lubrication, the r-f slug rack requires very little maintenance. It should not be taken apart except to replace worn or broken parts. Follow the procedure below to check the proper alinement of cams when reassembling.

b. Cam Positions. Three cam-locating holes are located in the front plate of the r-f slug rack assembly. When correctly phased or synchronized, the tips of all three cams will appear simultaneously before their respective alining holes. It may be necessary to use a small mirror to observe the holes accurately. If this is not practicable, another method of checking the operation of the cams is as follows:

(1) Turn the BAND CHANGE knob to tuning step 30 (29.5 to 30.5 mc) and turn the tuning dial to the extreme clockwise position. View the cam of camshaft assembly (right-hand end) from the front. The cam rider, or follower, should be located approximately one-sixteenth inch to the right of the tip of the cam. The cam rider should descend along the right-hand edge of the cam when the tuning dial is turned counterclockwise.

(2) Turn the BAND CHANGE knob to tuning step 16 (15.5 to 16.5 mc) and turn the tuning dial to the extreme counterclockwise position. The cam rider should be on the descending portion of the cam but should not be bottomed at the lowest point of the cam.

(3) Turn the BAND CHANGE knob to tuning step 15 (14.5 to 15.5 mc) and turn the tuning dial to the extreme clockwise position. Viewing the center cam from the front, the cam rider should be positioned about one-sixteenth inch to the left of the tip of the cam.

(4) Turn the BAND CHANGE knob to tuning step 8 (7.5 to 8.5 mc) and turn the tuning dial to the extreme counter-

clockwise position. Viewing the center cam from the front, the cam rider should be on the descending portion of the cam but should not be bottomed at the lowest point of the cam.

(5) Turn the BAND CHANGE knob to tuning step 7 (6.5 to 7.5 mc) and turn the tuning dial to the extreme clockwise position. Viewing the left-hand cam from the front, the cam rider should be located approximately one-sixteenth inch to the right of the tip of the cam. The cam rider should descend along the right-hand edge of the cam when turning the tuning dial counterclockwise.

(6) Turn the BAND CHANGE knob to tuning step 4 (3.5 to 4.5 mc) and turn the tuning dial to the extreme counterclockwise position. The cam rider should be on the descending portion of the cam but should not be bottomed at the lowest point of the cam.

c. Realinement of Cams. If the cams are not properly alined, they can be realined by loosening the setscrews in the driving coupler on shaft C (fig. 31), adjusting the cam positions, and tightening the setscrews again.

78. Replacement of Dial Cables

(fig. 39)

a. General. To replace either the slide-rule pointer cable or the drum cable, it is necessary to remove the front panel. Use the following procedure:

(1) Remove the top and bottom dust-covers from the receiver.

(2) Remove the SELECTIVITY, PHASING, BFO PITCH, ANT. TRIM, KILOCYCLES dial, and BAND CHANGE knobs.

(3) Remove the front panel screws and lift off the panel but do not detach it from the wiring to the chassis.

b. Pointer Cable. To replace the pointer cable, a 36⅝-inch length of nylon-covered cable is required.

(1) Turn pulley A counterclockwise to the stop.

(2) Tie a loop in the end of the cable and string the cable on pulley A.

(3) Wind the cable twice around pulley A, run it around pulley D, then attach it to the pointer, and run it around pulley C.

(4) Terminate the cable at the end of the spring on pulley A. The spring should be pulled to full tension.

(5) Replace the front panel by reversing the procedure in *a* above.

c. Drum Cable. To replace the drum cable, a 27-inch length of nylon-covered string is required.

(1) Turn the BAND CHANGE shaft to tuning step 30 (29.5 to 30.5 mc) position, thus causing pulley E to reach its counterclockwise stop.

(2) Tie a loop in the end of the cable and attach it to pulley E and wind it around as shown in figure 39.

(3) Turn pulley E about one-half turn and hold it against the tension of the spring.

(4) Run the cable to pulley E and work it around the pulley one and one-half turns or more as required, before attaching the end.

(5) Loosen the setscrew in the hub of the drum and aline the 29.5- to 30.5-mc scale so that it will show in the window when the front panel is replaced. Tighten the setscrew.

79. Refinishing

Instructions for refinishing badly marred panels are given in TM 9–2851.

14,5 - 15,5

82. Crystal Oscillator V105 Trimmer Adjustment

a. Trimmer capacitor C167, marked XTAL on chassis, should be adjusted to provide an input capacity of 32 $\mu\mu$f across the crystal holders. If this capacitor is badly mistuned, the crystals will be off frequency and low in output.

b. Connect a 470,000-ohm resistor to pin 7 of V102. Connect a vtvm (vacuum-tube voltmeter) between free end of 470,000-ohm resistor and chassis. (Resistor is used to reduce capacity of meter probe).

c. In all the following adjustments, the trimmers should be peaked if the indicated voltage is not more than 2 volts. If the voltage is more than 2 volts, detune the trimmer toward minimum capacity until voltage reads 2. (See fig. 33 for location of trimmer). Repeat this procedure when performing the following adjustments.

(1) When tuning trimmer marked 30, with BAND CHANGE switch on tuning step 30 (29.5 to 30.5 mc).

(2) When tuning trimmer marked 28, with BAND CHANGE switch on tuning step 28 (27.5 to 28.5 mc).

(3) When tuning steps 26 through 14, tuning correspondingly marked trimmers (see par. 4*b* for MEGACYCLE dial markings).

(4) With BAND CHANGE switch on tuning step 1, adjust trimmer labeled BC which is nearest V105.

d. Remove the 470,000-ohm resistor. Connect the resistor to pin 1 of V103. Connect vtvm between free end of resistor and chassis.

e. Place BAND CHANGE switch on tuning step 1. Tune trimmer marked BC that was not previously tuned as described above.

83. 100-kc Calibration Oscillator Adjustment

Calibrate the 100-kc crystal oscillator as explained in paragraph 17.

84. I-F Amplifiers and Crystal Filter Unit Alinement

Connect the signal generator between the grid (pin 7) of V106 and chassis. Connect one end of a clip lead between C173 and C111 at the output side of the calibration oscillator. Hold the other end of the lead near the grid of V106. Set the CALIBRATE switch at ON. Set the signal generator to zero beat at 500 kc. Turn the calibrator oscillator off by setting the CALIBRATE switch to OFF. Connect detuning network (.01-μf capacitor in series with 4,700-ohm resistor) from plate of V107 to chassis. Connect a vtvm across diode load resistor R151. Place SELECTIVITY switch, S114, in the 0 position.

a. Tune the secondary (bottom) slug or T103 for maximum indication. Keep diode load voltage below 3 volts by adjusting signal generator output.

b. Connect detuning network from terminal 4 of T103 to chassis. Tune the primary (top) slug for maximum indication.

c. Connect the detuning network from plate of V108 to chassis. Tune the secondary of T104 for maximum indication.

d. Connect the detuning network to terminal 4 of T104. Tune the primary of T104 for maximum indication.

e. Connect the detuning network to the plate of V109. Tune secondary of T105 for maximum indication.

f. Connect the detuning network to terminal 4 of T105. Tune the primary of T105 for maximum indication.

g. Tune T101 for maximum vtvm indication.

85. BFO Adjustment

a. Turn the BFO switch to ON. Connect the signal generator between the grid (pin 7) of V106 and chassis. Set the BFO PITCH capacitor to midrange.

b. With a Bristo wrench loosen the BFO PITCH knob, and match the index line to line on the chassis. Tighten the knob.

c. Adjust the tuning core in T106 for zero beat, using insulated screw driver.

86. Alinement of Dial

a. Loosen the two front set screws on the vfo coupler with the wrench. (Insert the wrench from the right side of the oscillator cylinder).

$9\frac{3}{4}$" X 11" Alum

$6\frac{3}{4}$" 11" "

$12\frac{3}{4}$" X 9" Bottom Wood

$12\frac{3}{4}$" X $10\frac{1}{8}$" & 2 Sides Wood

(301) 745 5913

b. Turn the vfo shaft by hand to an extreme clockwise position. (2.0 Mc)

c. Turn BAND CHANGE switch to tuning step 2 (1.5 to 2.5 mc). Turn main tuning dial to 2.0 mc. Set the KILOCYCLES dial to zero-zero. Tighten set screws.

d. Connect one end of the clip lead to pin 7 of V106. Connect the other end of the lead between C173 and C111. Turn the CALIBRATE control to ON.

e. Rotate the vfo shaft counterclockwise by hand, noting beat note once every revolution. Stop at the sixth beat note and carefully set to zero beat. Tighten the coupler screws.

87. Tuning Step 2 and Variable I-F (for Even-Numbered Steps)

a. Connect the signal generator with a 270-ohm series resistor to the ANTENNA jack. Set BAND CHANGE switch to tuning step 2 (1.5 to 2.5 mc). Set the MEGACYCLE tuning dial to read 1.6 mc. Connect the vtvm between diode load resistor R151 and chassis. 33K ok PIN 7

b. Turn the BFO switch to ON and adjust the signal generator for 1.6-mc output. Adjust the output of signal generator to give some value of diode load voltage below 5 volts. Tune adjustments marked 1.6 (slugs in L116, L118, and L102) for a maximum indication (figs. 30 and 33). Continue to adjust signal generator output so that the diode load voltage does not rise over 5 volts.

c. Set the MEGACYCLE tuning dial to read 2.4 mc. Set generator to zero beat at 2.4 mc with the bfo. Tune adjustments marked 2.4 (trimmer capacitors C174, C180, and C104) for a maximum indication, keeping diode load voltage below 5 volts (fig. 33).

d. Repeat the tuning process as outlined above at 1.6 and 2.4 mc until no further increase in output can be obtained.

88. Tuning Step 3 and Variable I-F (for Odd-Numbered Steps)

a. Connect the signal generator and the vtvm as directed in paragraph 87.

b. Set the MEGACYCLES dial to read 2.6 mc. Set signal generator to zero beat at 2.6 mc with bfo. Turn off the bfo. Adjust the tuning cores of L117, L119, and L103 (fig. 33) marked 2.6 for maximum indication on the vtvm.

c. Set the MEGACYCLES tuning dial to read 3.4 mc. Set signal generator to zero beat at 3.4 mc with the bfo. Turn off the bfo. Adjust the trimmer capacitors marked 3.4 (C176, C182, and C106) for maximum indication on the vtvm. This completes the alinement of the variable i-f stage.

89. Tuning Steps 4 Through 7

a. Connect the signal generator and the vtvm as directed in paragraph 87. Set the BAND CHANGE switch to tuning step 4 (3.5 to 4.5 mc).

b. Set main tuning dial to read 4.0 mc. Set signal generator to zero beat at 4.0 mc with the bfo. Turn off the bfo. Adjust tuning cores marked 4.0 (in L104, L107, and L111) for maximum indication on the vtvm.

c. Set the BAND CHANGE switch to tuning step 7 (6.5 to 7.5 mc). Set main tuning dial to read 7.0 mc. Set signal generator to zero beat at 7.0 mc with the bfo. Turn off the bfo. Tune trimmer capacitors marked 7.0 (C108, C120, and C128) for maximum indication on the vtvm.

d. Repeat tuning procedures at 4.0 and 7.0 mc until no further increase is noticeable on the vtvm.

90. Tuning Steps 8 Through 15

a. Connect signal generator and the vtvm as directed in paragraph 87.

b. Set the BAND CHANGE switch to tuning step 8 (7.5 to 8.5 mc). Set the MEGACYCLES tuning dial to 8.0 mc. Set the signal generator to zero beat with the bfo at 8.0 mc. Turn off the bfo. Adjust tuning cores marked 8 (L105, L108, and L112) for maximum indication on the vtvm.

c. Set the BAND CHANGE switch to tuning step 15 (14.5 to 15.5 mc). Set the MEGACYCLES dial to read 15.0 mc. Set the signal generator to zero beat with the bfo at 15.0 mc. Turn off the bfo. Tune trimmer capacitors marked 15 (C110, C122, and C130) for maximum indication on the vtvm.

d. Repeat the tuning procedures at 8.0 mc until no further increase in output can be obtained.

91. Tuning Steps 16 Through 30

a. Connect the signal generator and vtvm as outlined in paragraph 87.

b. Set the BAND CHANGE switch to tuning step 16 (15.5 to 16.5 mc). Set the MEGACYCLES tuning dial to 16.0 mc. Adjust the tuning cores marked 16 (L106, L109, and L113) for maximum indication on the vtvm.

c. Set the BAND CHANGE switch to tuning step 30 (29.5 to 30.5 mc). Set the MEGACYCLES tuning dial to 30.0 mc. Adjust trimmer capacitors marked 30 (C124 and C132) for a maximum indication on the vtvm.

d. Repeat tuning procedures at 16 and 30 mc until no further increase in output is apparent.

92. R-F Alinement, Tuning Step 1

a. Connect the signal generator and the vtvm as directed in paragraph 87.

b. Set the BAND CHANGE switch to tuning step 1 (.5 to 1.5 mc). Set the MEGACYCLES tuning dial to .6 mc. Set the signal generator to zero beat with bfo at .6 mc. Turn off the bfo. Adjust core in L114 so that it is approximately in the same position in the inductor as the cores in L116 and L118.

c. Adjust tuning cores marked .6 (in L101 and L110) for a maximum indication.

d. Adjust trimmer capacitor marked .6 (C140) for a maximum indication.

Note. Two peaks may be found when tuning capacitor C140. Use the peak that requires the higher value of capacity.

e. Set the MEGACYCLES tuning dial to 1.4 mc. Set signal generator to zero beat with the bfo at 1.4 mc. Turn off the bfo. Tune trimmers marked 1.4 (C102 and C119) for a maximum indication on the vtvm. Adjust tuning core marked 1.4 (L115) for a maximum indication on the vtvm.

f. Repeat the tuning procedures at .6 and 1.4 mc until no further increase in output can be obtained.

93. VFO Alinement

a. The careful design of the vfo used in Radio Receiver R–388/URR makes it unlikely that the dial calibration will become inaccurate through normal use or treatment. However, should the dial calibration become inaccurate, the following paragraphs will show a capable technician with adequate facilities how to correct the dial calibration.

b. If the slide-rule calibration only is off frequency in the same directions on all bands, the dial pointer can be corrected by grasping the dial cord and sliding the pointer along the cord until the correct position for the pointer is found.

c. If the vernier dial calibration is incorrect by the same amount for all bands, aline in accordance with instructions in paragraph 86.

d. If all other correction measures fail and the calibration continues erratic or inaccurate, it can be assumed that one of the parts within the oscillator can is defective. In this case the oscillator must be removed as outlined in paragraph 75.

Caution: The vfo is inclosed in a hermetically sealed container. No attempt should be made to remove this shield unless adequate repair facilities are available.

94. Alinement of Inductor L124.

a. Turn the BAND CHANGE switch to tuning step 1 (.5 to 1.5 mc).

b. Tune to the spurious signal (whistle) at 1,250 kc.

c. From the bottom of the receiver, adjust L124 for the greatest attenuation of the spurious signal.

Section IV. FINAL TESTING

95. General

This section is intended as a guide in determining the quality of the repaired receiver. The minimum test requirements outlined in the following paragraphs may be performed by maintenance personnel with adequate test equipment and the necessary skills. Repaired equipment meeting these requirements will furnish uniformly satisfactory operation.

96. Test Equipment Required for Final Testing

The instruments needed for testing the repaired equipment are listed in paragraph 62. No attempt should be made to run performance checks unless the performance characteristics of the available test equipment are equal or superior to the equipment listed.

97. Beat-Frequency Oscillator

a. Calibration oscillator can be used. Tune receiver.

b. Turn the BFO switch to ON.

c. Turn the main tuning dial through 1 mc of tuning.

d. An oscillatory note will be heard when the kc indicator reads zero-zero with the hairline zero adjustment at dead center. The mc slide rule dial pointer will be superimposed on one of the calibration marks of the dial.

98. Sensitivity

a. Set the controls as follows:

AVC switch	OFF
RF GAIN control	Maximum
AUDIO GAIN control.	As required for 10–1 signal-plus-noise to noise.
SELECTIVITY	0
LIMITER switch	OFF
BFO	OFF

b. Apply an r-f signal, modulated 30 percent at 400 cps, to the ANTENNA jack through a 47-ohm resistor in series with a 100-$\mu\mu$f capacitor.

c. Make tests at the low-, middle-, and high-frequency points of each band.

d. The sensitivity on tuning step 1 shall be better than 15 uv. The sensitivity on tuning steps 2 through 30 shall be better than 5 uv.

e. The over-all gain on tuning steps 2 through 30 shall be enough to give 1 watt of audio with less than 5 uv input (AVC off).

f. The c-w sensitivity on tuning step 1 shall be better than 5 uv and on tuning steps 2 through 30, the c-w sensitivity shall be better than 1.6 uv.

99. Signal-Plus-Noise to Noise Ratio

a. This test is made most conveniently along with the sensitivity test described above.

b. After each section of the band is tested as outlined in paragraph 98, apply a 1,000-uv signal modulated 30 percent at 400 cps. The AUDIO GAIN should be adjusted to give 500 mw output.

c. Turn the generator modulation off. The noise level should be better than 45 db below the 500-mw level.

100. Selectivity

a. Turn SELECTIVITY to 0.

b. Set the signal generator modulated 30 percent at 400 cps at any frequency on tuning step 1.

c. Tune receiver to signal generator frequency.

d. Measure the selectivity at the 6-db and 60-db attenuation points.

e. The bandwidth at the 6-db point shall be between 5.5 kc and 6.5 kc.

f. The bandwidth at the 60-db point shall be between 17 kc and 20 kc.

101. AVC Characteristic

The avc will begin to take over on tuning step 1 at a threshold of 6 uv of input signal. On tuning steps 2 through 30, the avc will begin to take over at a threshold of 3 uv of input signal. For a rise of .5 uv of input signal to 125 uv of input signal, the output level should increase no more than 3.5 db. For a rise of 125 uv to 500,000 uv in the input signal, the output level should not increase more than 5 db. For references, apply a 4.9-mc input signal modulated 30 percent at 400 cps to the ANTENNA jack through a series-connected 100-$\mu\mu$f capacitor and a 47-ohm resistor.

102. Over-All Distortion for an Input of 1,000 UV

Modulation percent	Output	Max distortion percent
30	500 mw	7.5
30	1.5 w	11
80	500 mw	11
80	1.5 w	14
80	2.5 w	17

CHAPTER 6

SHIPMENT AND LIMITED STORAGE AND DEMOLITION TO PREVENT ENEMY USE

Section I. SHIPMENT AND LIMITED STORAGE

103. Disassembly

The circumstances involved in shipment and storage vary. Therefore no definite procedure for repacking can be given. The following instructions are recommended as a guide for preparing the radio receiver for transportation and storage. To disassemble the equipment reverse the procedure for setting up the unit.

a. Turn the OFF-STANDBY-ON switch to OFF.

b. Remove power plug P101.

c. Disconnect antenna and ground from the receiver. Remove the handset plug from the receiver PHONES jack.

d. Remove receiver from rack.

104. Repacking for Shipment and Limited Storage

a. The exact procedure in repacking for shipment or limited storage depends on the material available and the conditions under which the equipment is to be shipped or stored. Refer to paragraph 10 and figure 7 and reverse the instructions given.

b. Whenever practicable, place a dehydrating agent, such as silica gel, inside the receiver. Box or package the head set. Wrap each unit in corrugated paper, and protect each package with a waterproof barrier. Seal the seams of the paper barrier with a waterproof sealing compound or tape. Pack the protected components in a wooden case, providing at least 3 inches of excelsior padding or other similar material between the paper barrier and the packing case.

Section II. DEMOLITION OF MATERIEL TO PREVENT ENEMY USE

105. General

The instructions below should be followed only upon order of the commander.

106. Destruction of Equipment

a. Smash. Smash the controls, tubes, coils, switches, capacitors, and head sets, using sledges, axes, handaxes, pickaxes, hammers, crowbars, or other heavy tools.

b. Cut. Cut cords, head sets, and wiring, using axes, handaxes, or machetes.

c. Burn. Burn technical manuals, cords, resistors, capacitors, coils, and wiring, using gasoline, kerosene, oil, flame throwers, or incendiary grenades.

d. Bend. Bend panels, cabinet, and chassis.

e. Explosives. If explosives are necessary, use firearms, grenades, or TNT.

f. Disposal. Bury or scatter the destroyed parts in slit trenches, fox holes, or other holes, or throw them into streams.

g. Destroy Everything.

APPENDIX I

REFERENCES

Note. For availability of items listed, check SR 310–20–3 and SR 310–20–4. Check Department of the Army Supply Catalog SIG 1 for availability of Signal Corps supply catalogs.

1. Army Regulations

AR 380–5	Safeguarding Military Information.
AR 750–5	Maintenance of Supplies and Equipment—Maintenance Responsibilities and Shop Operation.

2. Supply Publications

SB 11–6	Dry Battery Supply Data.
SB 11–47	Preparation and Submission of Requisitions for Signal Corps Supplies.
SB 11–76	Signal Corps Kit and Materials for Moisture- and Fungi-Resistant Treatment.

3. Publications on Test Equipment

TM 11–300	Frequency Meter Set SCR–211–(*).
TM 11–2627	Tube Testers I–177 and I–177–A.
TM 11–5017	Output Meter TS–585A/U.
TM 11–5030	Signal Generator TS–497A/URR.
TM 11–5044	Frequency Meter TS–174B/U.
TM 11–5511	Electronic Multimeter TS–505/U.
TM 11–5527	Multimeter TS–352/U.
TO 16–35TS382–2	Audio Oscillator TS–382A/U.

4. Painting, Preserving, and Lubrication

TB SIG 13	Moistureproofing and Fungiproofing Signal Corps Equipment.
TB SIG 69	Lubrication of Ground Signal Equipment.
TM 9–2851	Painting Instructions for Field Use.

5. Camouflage

FM 5–20	Camouflage, Basic Principles.

6. Decontamination

TM 3–220	Decontamination.

7. Demolition

FM 5–25	Explosives and Demolitions.

8. Other Publications

FM 24–18	Field Radio Techniques.
SR 310–20–3	Index of Training Publications (Field Manuals, Training Circulars, Firing Tables and Charts, Army Training Programs, Mobilization Training Programs, Army Training Tests, Graphic Training Aids, Joint Army-Navy-Air Force Publications, Combined Communications Board Publications, and Army Communications Publications).

d-c	direct-current
diam	diameter
dimen	dimension
F	Fahrenheit
f-m	frequency-modulation
h-f	high-frequency
h-v	high-voltage
icw	interrupted continuous wave
i-f	intermediate-frequency
JAN	Joint Army-Navy
kc	kilocycle
l-f	low-frequency
LP	lowpass
ma	milliampere
mc	megacycle
mcw	modulated continuous wave
mh or MH	millihenry
mv	millivolt
mw	milliwatt
pa	power amplifier
r-f	radio-frequency
rms	root mean square
SLC	straight-line capacity
term	terminal
μf	microfarad
$\mu\mu$f	micromicrofarad
uw	microwatt
uv	microvolt
vfo	variable-frequency oscillator

SR 310–20–4	Index of Technical Manuals, Technical Regulations, Technical Bulletins, Supply Bulletins, Lubrication Orders, Modification Work Orders, Tables of Organization and Equipment, Reduction Tables, Tables of Allowances, Tables of Organization, and Tables of Equipment.
SR 700–45–5	Unsatisfactory Equipment Report (Reports Control Symbol CSGLD–247).
SR 745–45–5 AFR 71–4	Report of Damaged or Improper Shipment (Reports Control Symbols CSGLD–66 (Army) and AF–MC–U2 (Air Force)).
TB 11–300–3	Rectifier Power Unit RA–133 and RA–133–A.
TB 11–499–( )*	Basic Radio Propagation Predictions.
TB 11–2627–2	Tube Test Data Cards for use With Tube Testers I–177, I–177-A, I–177-B, and with Tube Socket Adapter Kit MX–949/U.
TB SIG 25	Preventive Maintenance of Power Cords.
TB SIG 66	Winter Maintenance of Signal Equipment.
TB SIG 72	Tropical Maintenance of Ground Signal Equipment.
TB SIG 75	Desert Maintenance of Ground Signal Equipment.
TB SIG 123	Preventive Maintenance Practices for Ground Signal Equipment.
TB SIG 178	Preventive Maintenance Guide for Radio Communication Equipment.
TB SIG 219	Operation of Signal Equipment at Low Temperatures.
TM 9–2857	Storage Batteries Lead-Acid Type.
TM 11–314	Antennas and Antenna Systems.
TM 11–415	Dry Batteries.
TM 11–453	Shop Work.
TM 11–455	Radio Fundamentals.
TM 11–472	Repair and Calibration of Electrical Measuring Instruments.
TM 11–477	Fixed Station Radio Repair and Maintenance (Personnel Training Text).
TM 11–483	Suppression of Radio Noises.
TM 11–486	Electrical Communication Systems Engineering.
TM 11–496	Training Text and Applicatory Exercises for Amplitude-Modulated Radio Sets.
TM 11–499	(Preliminary), Radio Propagation Handbook.
TM 11–661	Electrical Fundamentals (Direct Current).
TM 11–681	Electrical Fundamentals (Alternating Current).
TM 11–875	Radio Receivers R–203/SR and R–203A/SR.
TM 11–4000	Trouble Shooting and Repair of Radio Equipment.

9. Abbreviations

a-c	alternating-current
a-f	audio-frequency
a-m	amplitude-modulated
amp	ampere
ampl	amplifier
avc	automatic volume control
bfo	beat-frequency oscillator
BP	band pass
C	centigrade
cps	cycles per second
cw	continuous wave
db	decibel

*A new TB in this series is issued monthly which gives propagation predictions 3 months in advance.

APPENDIX II

IDENTIFICATION TABLE OF PARTS

1. Requisitioning Items

The fact that a part is listed in this table is not sufficient basis for requisitioning the item. Requisitions must cite a specific T/O&E, T/A, SIG 7&8, list of allowances of expendable material, or other authorized supply basis. The Department of the Army Supply Catalog applicable to the equipment covered in this manual is SIG 7&8–R–388/URR. For an index of available supply catalogs in the Signal portion of the Department of the Army Supply Catalog, see the latest issue of SIG 1.

2. Identification Table of Parts for Radio Receiver R–388/URR

Ref symbol	Name of part and description	Function of part	Signal Corps stock No.
	RECEIVER, radio: Radio Receiver R–388/URR; .5 to 30.5 mc in thirty 1-mc ranges; for 115- to 230-v operation at 45 to 70 cyc; 85 w power consumption; chassis w/panel 10½" h x 19" w x 7/16" thk for std rack mtg; 10½" h x 19" wd x 13½" d behind panel; self-contained (does not incl speaker); 16-tube superheterodyne circuit; uses single, double, or triple conversion depending on freq of received signal; 500 kc if HF osc is Xtal controlled; BFO; crystal filter; integral calibration Xtal osc (100 kc); amplified AVC; series type noise limiter; Collins Model 51J3.	Reception of mcw, c-w and voice (a-m) signals.	2C4180–388
	BEARING, roller: single axial roller; .437" bore, 1" dia OD, ¼" wd o/a; B&W dwg WE–A–2761–2.	Part of main gear assembly.	2Z581–85
	BEARING, ball: steel; spherical, 7/16" dia; Norma-Hoffman per Collins part #309 5200 00.	Part of main gear assembly.	3H227–2
	BOARD, terminal: 2 riveted brass solder lug term; ½" between ctr; phenolic sheet LTS–E4; 1.375" lg x 1" wd x 27/64" h o/a; two .140" dia mtg holes diagonally on 1.125" x .750" ctr; Collins part/dwg #505 2124 001; spec MIL–P–3115A.	Mounts antenna coil, tuning steps 16 through 30.	3Z770–2.101
	BOARD, terminal: general purpose; 2 brass solder lug cad pl term; 5/8" lg x 3/8" wd x 7/16" thk o/a.	Component mounting.	3Z770–2.79
	BOARD, terminal: general purpose; 3 brass solder lug term; 1⅛" lg x 3/8" wd x 7/16" thk o/a.	Component mounting.	3Z770–3.49
	BOARD, terminal: general purpose; 3 brass solder lug term; 3 cad pl steel screws; 2⅛" lg x 5/8" wd x 11/16" h o/a; two .136" dia mtg holes 1¾" between ctr.	Tie points.	3Z770–3.44
	BOARD, terminal: general purpose; 3 brass solder lug term; phenolic board; 1⅛" lg x 3/8" wd x 7/16" thk o/a.	Tie points.	3Z770–3.48
	BOARD, terminal: general purpose; 2 solder lug term, brass, cad pl; terms 3/8" between ctr; phenolic board; 5/8" lg x ½" wd x 3/32" h; one .140" dia mtg hole.	Component mounting.	3Z770–2.102
	BUTTON, plug: brass, nickel pl; for 3/8" dia hole; .050" to .062" thk; ½" dia x 11/64" thk; Collin part #308 0051 00.	Covers holes.	2Z1480.78
	BUTTON, plug: fits ½" hole; 11/64" dia x 7/16" d, 3/32" lg prongs.	Covers hole.	2Z1607–76

Ref symbol	Name of part and description	Function of part	Signal Corps stock No.
	CABLE, assembly: stranded SS core .018" dia w/nylon coating .032 dia OD; 7 strands; 35 lbs pull; 8" lg; 1 end terminates in loop stripped of nylon, secured by brass sleeve; loop passes .031" min dia wire; Berkley Fly Co per Collins part #432 1011 00.	Loading cable (part of main gear assembly).	2Z1588–13
	CABLE, mechanical: stranded steel core .012" dia w/ nylon coating .032 OD.	Dial cable.	2Z8877.406
	CABLE, power: underwriters type SJ; two #18 AWG stranded cond (41 strands #34 AWG bare copper).	A-C power cable.	1B3018–2.28
O106, O118	CAM.	Variable i-f slug rack cams.	6C10A–2
O116	CAMSHAFT ASSEMBLY.	H-f, r-f slug rack cam assembly.	2Z8203–515
O117	CAMSHAFT.	Medium-frequency r-f slug rack cam assembly.	2Z8203–514
O115	CAMSHAFT ASSEMBLY.	L-f, r-f slug rack cam assembly.	2Z8203–516
C116	CAPACITOR, fixed: ceramic; 1.0 $\mu\mu$f ± .25 $\mu\mu$f; 500 vdcw; JAN type CC30CK010C.	V102 grid coupling.	3D9001–29
C133	CAPACITOR, fixed: ceramic; 1.5 $\mu\mu$f ± .25 $\mu\mu$f; 500 vdcw; JAN type CC30CK1R5C.	V102 grid coupling, tuning steps 4 through 7.	3D9001E5–11
C111, C117, C192, C196, C201, C221	CAPACITOR, fixed: ceramic; 2 $\mu\mu$f ± .25 $\mu\mu$f; 500 vdcw; JAN type CC30CK020C.	C111: 100 kc signal coupling to V101. C117: V101 grid coupling, tuning step 1. C192: T103 top coupling. C196: T104 top coupling. C201: T105 top coupling. C221: Variable i.f. top coupling.	3D9002–27
C220	CAPACITOR, fixed: ceramic; 4 $\mu\mu$f ± .25 $\mu\mu$f; 500 vdcw; JAN type CC30CK040C.	Variable i-f top coupling.	3D9004–25
C238	CAPACITOR, fixed: ceramic; 5 $\mu\mu$f ± ½ $\mu\mu$f; 500 vdcw; JAN type CC30CK050D.	Tuning steps 16 through 30 antenna coupling.	3D9005–121
C173, C187, C237	CAPACITOR, fixed: ceramic; 10 $\mu\mu$f ± 1 $\mu\mu$f; 500 vdcw; JAN type CC30CK100F.	C173: 100-kc signal coupling to V101. C187: Filter crystal parallel. C237: Tuning steps 8 through 15 antenna coupling.	3D9010–180
C151, C165	CAPACITOR, fixed: ceramic; 15 $\mu\mu$f ±5%; 500 vdcw; JAN type CC30CK150J.	C151: V105 crystal oscillator plate tuning. C165: V105 crystal oscillator feedback.	3D9015–133
C139	CAPACITOR, fixed: ceramic; 20 $\mu\mu$f ±5%; 500 vdcw; JAN type CC30CK200J.	L115 trimmer.	3D9020–63
C236	CAPACITOR, fixed: ceramic; 22 $\mu\mu$f ±5%; 500 vdcw; JAN type CC30CK220J.	Antenna coupling, tuning step 7.	3D9022–57
C232	CAPACITOR, fixed: ceramic dielectric; 24 $\mu\mu$f ±5%; 500 vdcw; JAN type CC30CK240J.	Antenna coupling, tuning steps 16 through 30.	3D9024–56
C153 C235	CAPACITOR, fixed: ceramic; 36 $\mu\mu$f ±5%; 500 vdcw; JAN type CC30CK360J.	C153: V105 xtal oscillator plate tuning. C235: Antenna coupling tuning step 3.	3D9036–14
C155	CAPACITOR, fixed: ceramic; 47 $\mu\mu$f ±5%; 500 vdcw; JAN type CC30CK470J.	V105 crystal oscillator plate tuning.	3D9047–38
C5	CAPACITOR, fixed: ceramic; 50 $\mu\mu$f ±2%; 500 vdcw; (choose 1 of 7, so that freq does not vary more than ±300 cps from freq at 30°C over temp range of 0°C to +60°C).	Part of bfo assembly (compensating cap).	3D9050–160

Ref symbol	Name of part and description	Function of part	Signal Corps stock No.
C5	CAPACITOR, fixed: ceramic; 50 $\mu\mu$f $\pm$2%; 500 vdcw; (choose 1 of 7, so that freq does not vary more than $\pm$300 cps from freq at 30°C over temp range of 0°C to +60°C).	Part of bfo assembly (compensating cap).	3D9050–161
C5	CAPACITOR, fixed: ceramic; 50 $\mu\mu$f $\pm$2%; 500 vdcw; (choose 1 of 7, so that freq does not vary more than $\pm$300 cps from freq at 30°C over temp range of 0°C to +60°C).	Part of bfo assembly (compensating cap).	3D9050–159
C5	CAPACITOR, fixed: ceramic; 50 $\mu\mu$f $\pm$2%; neg temp coef 1200 (tol $\pm$180) $\mu\mu$f/μf/°C; 500 vdcw; (choose 1 of 7, so that freq does not vary more than $\pm$300 cps from freq at 30°C over temp range of 0°C to +60°C).	Part of bfo assembly (compensating cap).	3D9050–170
C5	CAPACITOR, fixed: ceramic; 50 $\mu\mu$f $\pm$2%; 500 vdcw; (choose 1 of 7, so that freq does not vary more than $\pm$300 cps from freq at 30°C over temp range of 0°C to +60°C).	Part of bfo assembly (compensating cap).	3D9050–171
C5	CAPACITOR, fixed: ceramic; 50 $\mu\mu$f $\pm$2%; 500 vdcw; (choose 1 of 7 so that freq does not vary more than $\pm$300 cps from freq at 30°C over temp range of 0°C to +60°C).	Part of bfo assembly (compensating cap).	3D9050–168
C5	CAPACITOR, fixed: ceramic; 50 $\mu\mu$f $\pm$2%; 500 vdcw; (choose 1 of 7 so that freq does not vary more than $\pm$300 cps from freq at 30°C over temp range of 0°C to +60°C).	Part of bfo assembly (compensating cap).	3D9050–169
C234	CAPACITOR, fixed: ceramic; 51 $\mu\mu$f $\pm$5%; JAN type CC30UK510J.	Antenna coupling, tuning step 2.	3D9051–68
C157	CAPACITOR, fixed: ceramic; 68 $\mu\mu$f $\pm$5%; 500 vdcw; JAN type CC30UK680J.	V105 crystal oscillator plate tuning.	3D9068–27
C231, C233	CAPACITOR, fixed: ceramic; 100 $\mu\mu$f $\pm$5%; 500 vdcw; JAN type CC30UJ101J.	C231: coil L105 (tuning steps 8 through 15) trimmer. C233: Antenna coupling, tuning step 1.	3D9100–230
C114, C115, C126, C134, C135, C137, C138, C141, C142, C163, C164, C170, C172, C178, C183, C185, C186, C189, C190, C191, C193, C194, C195, C197, C199, C200, C207,	CAPACITOR, fixed: ceramic; 10,000 $\mu\mu$f, guaranteed min value tol; 350 vdcw.	C114: V101 avc isolation. C115: V101 screen r-f bypass. C126: V101 plate circuit decoupling. C134: V102 cathode r-f bypass. C135: V102 screen r-f bypass. C137: L114 to L115 coupling. C138: V102 plate circuit decoupling. C141: V103 cathode r-f bypass. C142: V103 screen r-f bypass. C163: V105 plate circuit decoupling. C164: V105 screen r-f bypass. C170: V104 cathode r-f bypass. C172: V104 plate circuit decoupling. C178: V103 plate circuit decoupling. C183: V106 cathode r-f bypass.	3DA10–527

Ref symbol	Name of part and description	Function of part	Signal Corps stock No.
C208, C209, C211, C213, C218, C219, C227, C228		C185: V106 screen r-f bypass. C186: V106 plate circuit decoupling. C189: V107 grid decoupling. C190: V107 screen r-f bypass. C191: V107 plate circuit decoupling. C193: V108 grid decoupling. C194: V108 screen r-f bypass. C195: V108 plate circuit decoupling. C197: V109 grid decoupling. C199: V109 screen r-f bypass. C200: V109 plate circuit decoupling. C207: A-c line filter. C208: Avc amplifier degenerative feedback. C209: Audio grid coupling to V112. C211: Audio grid coupling to V113. C213: Avc bypass. C218: V114 screen r-f bypass. C219: V114 plate circuit decoupling. C227: I-f output V111 plate bypass. C228: I-f output coupling.	
C223	CAPACITOR, fixed: electrolytic; 8 μf; 350 vdcw; JAN type CE63B080P.	B+ isolation.	3DB8–222
C215, C216	CAPACITOR, fixed: electrolytic; 20 μf; 150 vdcw; JAN type CE63C200J.	C215: V111 cathode bypass. C216: Bias filter for V113.	3DB20–112
C217	CAPACITOR, fixed: electrolytic; 2 sect; 35 μf ea sect; 450 vdcw ea sect; JAN type CE52F350R.	Power supply filter.	3DB35–3
C206	CAPACITOR, fixed: mica; 5 $\mu\mu$f $\pm$5%; 500 vdcw.	V114 to V110 bfo coupling.	3D9005–123
C109	CAPACITOR, fixed: mica; 20 $\mu\mu$f $\pm$5%; 500 vdcw.	L105 trimmer.	3D9020–77
C123, C129	CAPACITOR, fixed: mica; 75 $\mu\mu$f $\pm$5%; 500 vdcw.	C123: L108 trimmer. C129: L112 trimmer.	3D9075–51
C113, C136, C143, C166, C171, C184, C204, C226	CAPACITOR, fixed: mica; 100 $\mu\mu$f $\pm$5%; 500 vdcw.	C113: V101 grid coupling. C136: V102 injection coupling. C143: V103 injection coupling. C166: Oscillator feedback network. C171: V104 screen bypass. C184: V106 grid bypass for harmonic amplitude control. C204: Avc rectifier coupling. C226: V111 voltage divider.	3D9100–294
C107	CAPACITOR, fixed: mica; 130 $\mu\mu$f $\pm$5%; 500 vdcw.	L104 trimmer.	3D9130–23

Ref symbol	Name of part and description	Function of part	Signal Corps stock No.
C145, C159	CAPACITOR, fixed: mica; 150 $\mu\mu$f $\pm$5%; 500 vdcw.	C145: L121 trimmer. C159: 1,250-kc filter trimmer.	3D9150–92
C175, C179	CAPACITOR, fixed: mica; 180 $\mu\mu$f $\pm$2%; 500 vdcw.	C175: L117 trimmer. C179: L118 trimmer.	3D9180–38
C161	CAPACITOR, fixed: mica; 200 $\mu\mu$f $\pm$2%; 500 vdcw.	V105 xtal oscillator plate tuning.	3D9200–109
C105, C121, C127, C168	CAPACITOR, fixed: mica; 220 $\mu\mu$f $\pm$2%; 500 vdcw.	C105: L103 trimmer. C121: L107 trimmer. C127: L111 trimmer. C168: V106 grid trap.	3D9220–34
C177, C181	CAPACITOR, fixed: mica; 300 $\mu\mu$f $\pm$2%; 500 vdcw.	C177: L117 trimmer. C181: L118 trimmer.	3D9300–69
C202	CAPACITOR, fixed: mica; 330 $\mu\mu$f $\pm$2%; 500 vdcw.	Diode load bypass.	3D9330–27
C103	CAPACITOR, fixed: mica; 430 $\mu\mu$f $\pm$2%; 300 vdcw.	L102 trimmer	3D9430–5
C101	CAPACITOR, fixed: mica; 820 $\mu\mu$f $\pm$2%; 500 vdcw.	L101 trimmer.	3D9820–14
C118	CAPACITOR, fixed: mica; 910 $\mu\mu$f $\pm$1%; 500 vdcw.	L110 trimmer.	3D9910–3
C212	CAPACITOR, fixed: mica; 6800 $\mu\mu$f $\pm$10%; 500 vdcw; JAN type CM40B682K.	Audio output equalizer.	3K4068221
C214	CAPACITOR, fixed: paper; 2 sect; 100,000-100,000 $\mu\mu$f +20% —10%; 600 vdcw; JAN type CP53B4EF104V.	K101 contact spark suppressor.	3DA100–770
C198A, B	CAPACITOR, fixed: paper; 2 sect; 100,000-100,000 $\mu\mu$f +20% —10%; 600 vdcw; JAN type CP54B4EF104V.	C198A: V109 cathode bypass. C198B: T108 filament winding bypass.	3DA100–777
C205A, B, and C	CAPACITOR, fixed: paper; 3 sect; 100,000 $\mu\mu$f +20% —10% ea sect; 600 vdcw ea sect; JAN type CP54B5EF104V.	C205A: Bias line bypass. C205B: Part of avc filter. C205C: Noise limiter filter.	3DA100–732
C167	CAPACITOR, variable: ceramic; rotary type; 3 to 12 $\mu\mu$f 1 sect.	Crystal trimming.	3D9012V–25
C110, C122, C124, C130, C132, C146, C147, C148, C149, C169	CAPACITOR, variable: ceramic; rotary type, 1 sect; 5 to 25 $\mu\mu$f.	C110: L105 trimming. C122: L108 trimming. C124: L109 trimming. C130: L112 trimming. C132: L113 trimming. C146: Crystal oscillator plate tuning. C147: Crystal oscillator plate tuning. C148: Crystal oscillator plate tuning. C149: Crystal oscillator plate tuning. C169: Calibration oscillator feedback.	
C188	CAPACITOR, variable: air dielectric; single sect plate meshing type; 3.5 to 27 $\mu\mu$f; SLC characteristic.	Crystal filter PHASING.	3D9027V–6
C102, C104, C106, C108, C119, C120, C128, C140, C144, C150, C152, C154, C156,	CAPACITOR, variable: ceramic; rotary type; 8 to 50 $\mu\mu$f, 1 sect.	C102: L101 trimmer. C104: L102 trimmer. C106: L103 trimmer. C108: L104 trimmer. C119: L110 trimmer. C120: L107 trimmer. C128: L111 trimmer. C140: L115 trimmer. C144: L121 trimmer. C150: Crystal oscillator tuning. C152: Crystal oscillator tuning.	3D9050V–117

Ref symbol	Name of part and description	Function of part	Signal Corps stock No.
C158, C162, C174, C176, C180, C182		C154: Crystal oscillator tuning. C156: Crystal oscillator tuning. C158: Crystal oscillator tuning. C162: Crystal oscillator tuning. C174: L116 trimmer. C176: L117 trimmer. C180: L118 trimmer. C182: L119 trimmer.	
C224, C230	CAPACITOR, variable: air dielectric; single sect, plate meshing type; 7 to 100 $\mu\mu$f; SLC characteristic.	C224: CAL. control for 100-kc oscillator frequency adjustment. C230: ANT. TRIM capacitor.	3D9100V–85
	CLAMP: xtal; for .093" dia crystal holder; incl ⅜" x ⅜" x ⅛" sponge rubber pad cemented to clamp.	Secures 100-kc crystal.	2Z2642.359
L114, L116	COIL, RF: replacement coil.	L114: First mixer V102 plate coil for tuning step 1. L116: Variable i-f coil.	3C607B–1
L118	COIL, IF transformer: replacement coil.	Variable i-f coil.	3C607B–2
L115	COIL, RF: unshielded phenolic form, beryllium copper silver pl term rings.	Intermediate mixer V103 grid coil for tuning step 1.	3C357–48
L117, L119	COIL, RF: replacement coil.	L117: Variable i-f plate coil. L119: Variable i-f coil.	3C607B–3
L102	COIL, RF: antenna; single layer wnd; 48 turns #28E wire; 2⅜" lg x .437" dia phenolic coil form; adj iron core (not incl).	Antenna coil, tuning step 2.	3C1084S–65
L103	COIL, RF: antenna; single layer wnd; 43 turns #28E wire; 2⅝" lg x .437" dia phenolic form; adj iron core (not incl).	Antenna coil, tuning step 3.	3C1084S–64
L121	COIL, RF: single layer wnd; 46 turns #30 double E wire, closely spaced, tapped at 13 turns; ¾" lg x .187" dia bakelite form w/core.	V105 crystal oscillator plate coil.	3C1084S–47
L101, L110	COIL, RF: single layer wnd; 75 turns #35E wire; 2" lg x .295" dia phenolic form; slug tuning (core not incl).	L101: Antenna coil, tuning step 1. L110: V102 grid coil, tuning step 1.	3C1084S–43
L120	COIL, RF: choke; 3 universal wnd.	V105 crystal oscillator cathode choke.	3C357–49
L106, L109, L113	COIL, RF: single layer wnd; 15 turns #28E wire; 2" lg x .295" dia phenolic form; slug tuned (core not incl).	L106: Antenna coil, tuning step 16 through 30. L109: R-f amplifier V101 plate coil, tuning steps 16 through 30. L113: First mixer V102 grid coil, tuning, steps 16 through 30.	3C1084S–46
L105, L108, L112	COIL, RF: single layer wnd; 20 turns #28E wire; 2" lg x .295" dia phenolic form; slug tuned (core not incl).	L105: Antenna coil, tuning steps 8 through 16. L108: R-f amplifier V101 plate coil, tuning steps 8 through 16. L112: First mixer V102 grid coil, tuning steps 8 through 16.	3C1084S–45

Ref symbol	Name of part and description	Function of part	Signal Corps stock No.
L104, L107, L111	COIL, RF: single layer wnd; 27 turns #28E wire; 2" lg x .295" dia phenolic form; slug tuned (core not incl).	L104: Antenna coil, tuning steps 4 through 7. L107: R-f amplifier V101 plate coil, tuning steps 4 through 7. L111: First mixer V102 grid coil, tuning steps 4 through 7.	3C1084S–44
L125	COIL, RF: 3 pie universal wnd; 500 uh ±10% at 1000 kc; powdered iron form.	Part of V106 500-kc grid trap.	3C357–57
O136	COLLAR, shaft: SS; circular; ½" OD x ¼" ID x .221" thk; two #6–40 NF–2 tapped holes at 90 deg.	For tuning knob tension.	2Z2935–93
P101	CONNECTOR, plug: 2 parallel blade male cont; straight.	Line cord plug.	6Z1727
J101, J104	CONNECTOR, receptacle: single round female cont; straight.	J101: Antenna coax connector. J104: IF OUTPUT connector.	2Z8799–239
	CONTACT, tube socket: phosphor bronze, silver pl; .57" lg x .102" wd x .104" h; mts in xtal or tube socket base; for .050" dia prong; Amphenol part #9–028–12.	Crystal socket contact.	2Z3193–136
	CORE, adjustable tuning: powdered iron core w/brass cad pl stud; freq 12 mc max; 1.187" lg x .242" dia; fits inside coil; Aladdin per Collins part #288 1062 00.	Part of coil assembly.	2Z3262–61
E149, E150, E151, E152, E153, E154, E155, E156, E157	CORE, adjustable tuning: 3 11/32" lg o/a x .256" dia.	E149: Tunes coil L104. E150: Tunes coil L105. E151: Tunes coil L106. E152: Tunes coil L107. E153: Tunes coil L108. E154: Tunes coil L109. E155: Tunes coil L111. E156: Tunes coil L112. E157: Tunes coil L113.	2Z3262–46
E144, E145, E146, E147, E148	CORE, adjustable tuning: 3 7/16" lg x .25" dia.	E144: Tunes coil L102. E145: Tunes coil L103. E146: Tunes coil L114. E147: Tunes coil L116. E148: Tunes coil L118.	2Z3262–45
E142, E143	CORE, adjustable tuning: 4 5/16" lg o/a; .255" dia.	E142: Tunes coil L101. E143: Tunes coil L110.	2Z3262–44
	COUPLING, flexible: for ¼" shafts; 1¼" wd x 1¼" h x 13/32" d.	Crystal PHASING control coupler.	2Z3290
O102, O103	COUPLING, flexible: ¼" to ⅜" shaft coupling; 1.094" dia x .672" lg o/a.	O102: Oscillator switch shaft coupling. O103: Antenna switch shaft coupling.	2Z3295–148
	COUPLING, flexible: ¼" - ¼" shaft coupling 1.094" dia x .672" lg o/a.	Coupler on shaft extension.	2Z3295–152
O139	COUPLING, rigid: sleeve type; .2505" shaft size ea end; 1" lg x ½" dia o/a, shaft 9.234" lg extension from coupling.	Part of i-f drive shaft assembly.	2Z8203–493
O128	COUPLING, rigid: sleeve type; .2505" shaft size ea end; 1" lg x ½" dia o/a.	Part of i-f drive shaft assembly coupling.	2Z3272–213
O108	COUPLING, rigid: sleeve type; .253" shaft size ea end; ½" lg x ½" dia o/a.	Crystal filter shaft coupling.	2Z3273–239
Y104	CRYSTAL UNIT: Crystal Unit CR–18/U; single xtal plate, Crystal Holder HC–6/U; 9,000 kc.	Crystal for tuning steps 15 through 16.	2X209–9000

Ref symbol	Name of part and description	Function of part	Signal Corps stock No.
Y108	CRYSTAL UNIT: Crystal Unit CR–18/U; single xtal plate, Crystal Holder HC–6/U; 8,000 kc.	Crystal for tuning steps 5 through 6.	2X209–8000
Y102	CRYSTAL UNIT: Crystal Unit CR–18/U; single xtal plate, Crystal Holder HC–6/U; 13,000 kc.	Crystal for tuning steps 23 through 24.	2X209–13000
Y103	CRYSTAL UNIT: Crystal Unit CR–18/U; single xtal plate, Crystal Holder HC–6/U; 11,000 kc.	Crystal for tunings steps 19 through 20.	2X209–11000
Y106	CRYSTAL UNIT: Crystal Unit CR–18/U; single xtal plate, Crystal Holder HC–6/U; 12,000 kc.	Crystal for tuning steps 9, 10, 21, and 22.	2X209–12000
Y110	CRYSTAL UNIT: Crystal Unit CR–18/U; single xtal plate, Crystal Holder HC–6/U; 4,000 kc.	Crystal for tuning steps 1 through 2.	2X209–4000
Y109	CRYSTAL UNIT: Crystal Unit CR–18/U; single xtal plate, Crystal Holder HC–6/U; 6,000 kc.	Crystal for tuning steps 3 through 4.	2X209–6000
Y107	CRYSTAL UNIT: Crystal Unit CR–18/U; single xtal plate, Crystal Holder HC–6/U; 10,000 kc.	Crystal for tuning steps 7, 8, 17, 18, 27, and 28.	2X209–10000
Y101	CRYSTAL UNIT: Crystal Unit CR–18/U; single xtal plate, Crystal Holder HC–6/U; 10,666.67 kc.	Crystal for tuning steps 29 through 30.	2X209–10666.67
Y105	CRYSTAL UNIT: Crystal Unit CR–18/U; single xtal plate, Crystal Holder HC–6/U; 14,000 kc.	Crystal for tuning steps 11, 12, 25, and 26.	2X209–14000
Y111	CRYSTAL UNIT, quartz: single xtal plate; 100 kc nominal.	Calibration crystal.	2X226–100
Y112	CRYSTAL UNIT: Crystal Unit CR–7/U; single xtal plate; 500 kc ±500 cyc.	I-f filter crystal.	2X225–500
	DIAL: vernier dial; c/o dial hub and washer in soldered assem; brass hub, SS washer; circular; 1¼″ dia x .343″ d; mts on ¼″ shaft; has two #4–48 NF–2 holes at 90 deg for set screws.	Vernier dial.	2Z3723–292
I105	DIAL: drum.	Band indicating MEGACYCLES drum.	2Z3723–231
L124	FILTER, band suppression: 1½″ lg x ¾″ dia o/a; .260″ dia hole thru coil form for mtg; 2 wire lead term.	Part of spurious 1,250-kc filter Z111.	2Z4376–111
T102	FILTER, band pass: 490 to 510 kc min range (shunted by 65 μμf); 1 17/32″ x 1 17/32″ x 3 13/16″ max h o/a; 270,000-ohm parallel impedance; rectangular metal case; two ⅜″ studs on bottom diagonally located, 1.312″ between ctr; 2 solder lug term on top, 2 solder lug term on bottom; MFP, core adj from top or bottom.	Crystal filter output.	2Z4376–110
F101	FUSE, cartridge: 1.5 amp; 250 v.	A-c line fuse.	3Z2601.5
	GEAR ASSEMBLY: c/o:	Tuning and band changing gears.	2Z4875–412

Item	*Collins part dwg No.*
Back gear panel	505 2179 003
Front gear panel	505 2180 003
Rev gears and shaft assem	504 3111 002
I-f driver gear and shaft assem	504 3014 001
Gear assem, switch IF	504 3004 001
Mc knob shaft	504 2956 001
Knob gear and hub assem	504 3013 001
Shaft assem, band switch	504 3006 001
Ball, 7/32″ dia (2 ea)	309 5200 00
Shaft assem, Geneva wheel	504 3012 001
Thrust bearing	504 2972 001
Rub assem, Geneva wheel	504 3015 001
Centering spring	504 2932 001
Hub assem, detent gear	504 3018 001
Detent spring assem	504 3025 001
Center planet, gear and hub assem	504 3020 001
Hub assem, floating	504 3016 001
Shaft and gear assem	500 3005 001

Ref symbol	Name of part and description	Function of part	Signal Corps stock No.
	Item — *Collins part dwg No.*		
	Stop idler gear hub assem — 504 3009 001		
	Pointer pulley assem — 504 5645 002		
	Pulley, drum — 504 2954 001		
	Post, lower spacing — 505 2128 001		
	Post, upper spacing — 505 2127 001		
	Loading cable — 423 1011 00		
	Spring — 502 1158 002		
	Miscellaneous assem hdw 17⅛" lg x 6" wd x 4" d approx o/a; mts by five .175" dia holes irregularly spaced; Collins Rad part/dwg #505 2189 004.		
	GROMMET: synthetic rubber or neoprene; fits $\frac{13}{16}$" dia hole.	Prevents abrasion.	6Z4856–53
	GROMMET: synthetic rubber or neoprene; fits $\frac{7}{16}$" dia hole.	Prevents abrasion.	6Z4886
	GROMMET: synthetic rubber or neoprene; fits ⅞" dia hole.	Prevents abrasion.	6Z4856–56
	GROMMET: synthetic rubber or neoprene; fits ¼" dia hole.	Prevents abrasion.	6Z4914
	GROMMET: synthetic rubber or neoprene; fits $\frac{5}{16}$" dia hole; ANA std type AN931–3–S.	Prevents abrasion.	6Z4895
XF101	HOLDER, fuse: extractor post; for one 3AG cartridge fuse.	Holds fuse F101.	3Z3285–2
O101A	HUB: coupler; SS, unfinished; rd 1.090" dia x .327" thk o/a; .1880" dia ctr mtg hole for shaft, two #6–40 NF–2 tapped holes at 90 deg and perpendicular to shaft hole.	Part of vfo coupler.	2Z5180–35
O101C	HUB: SS, unfinished; 1.090" dia x .327" thk; .250" dia ctr mtg hole for shaft, two #6–40 NF–2 tapped holes at 90 deg and perpendicular to shaft hole.	Part of vfo coupler.	2Z5180–36
	INSULATOR, stand-off: round post shape; natural bakelite; .750" lg; ⅜" OD, tapped #6–32 NC–2 x ½" dia ea end.	Part of audio meter board assembly.	3G350–119
J102	JACK: Jack JJ–033; for 3 cond plug .206" dia x 1.093" lg.	SPEAKER jack.	2Z5533
J103	JACK: Jack JJ–034; for 2 cond plug .250" dia.	PHONES jack.	2Z5534
	KNOB: round; black phenolic; for ¼" dia shaft.	Controls.	2Z5822–484
	KNOB: round, tapered; black phenolic; for ¼" dia shaft; one #8–32 tapped hole for set screw; $\frac{13}{16}$" dia x $\frac{33}{32}$" lg o/a; $\frac{31}{32}$" dia shaft hole; surface knurled.	Control.	2Z5822–580
	KNOB: round; black phenolic; for ¼" shaft; indicator mark filled white; 1⅛" dia x $\frac{13}{16}$" lg o/a; no insert.	Controls.	2Z5822–485
	KNOB: round, w/pointer; black phenolic; for ¼" dia shaft.	Control.	2Z5821–4.1
	KNOB: round; black phenolic; for .253" dia shaft; two #8–32 tapped holes for set screws; 1¾" dia skirt; 1⅜" dia x ⅞" lg o/a; brass; $\frac{33}{32}$" dia shaft hole; indicator mark filled white.	Control.	2Z5822–581
I104	LAMP, glow: Navy type #VG-12; 105-125 v, ¼ w; 1½" lg o/a; bayonet base candelabra; GE type NE–48.	Receiver protective lamp.	2Z5889–3
I101, I102, I103	LAMP, incandescent: Lamp IM–52; 6 to 8 v, .15 amp; miniature bayonet base.	Dial illuminations.	2Z5925.1
XI103	LAMPHOLDER: miniature bayonet; $\frac{31}{32}$" lg x $\frac{55}{32}$" dia o/a.	Holder for I103.	2Z5883–349
XI101, XI102	LAMPHOLDER: miniature bayonet; 1⅜" lg x $\frac{7}{16}$" wd x $\frac{13}{16}$" thk o/a.	XI101: Holder for I101. XI102: Holder for I102.	2Z5883–353

Ref symbol	Name of part and description	Function of part	Signal Corps stock No.
M101	METER, audio level: DC milliammeter calibrated for db; range 0 to 1 ma; round, plastic, flush panel mtg case.	Audio level meter.	3F3307.5–8
	MOUNTING, coil: holds coil and core (.375" OD); steel, cad plate; irregular shape; $\frac{41}{64}$" lg x $\frac{29}{64}$" wd x .274" h above mtg surface; mts in .417 dia hole and .080" dia hole, .310" between ctr.	Coil holder.	2Z6820.355
Z101	OSCILLATOR, RF: 2.0 to 3.0 mc; not xtal controlled; approx .001 w output; 5½" lg x 2⅝" wd x 2⅞" h approx; integral coil; receives power from main rectifier unit; mts on front panel by three #6–32 NC–2 tapped holes on 1.75" x 1.468" ctr; HS; Collins part # 7CE15, dwg #505 4011 004.	Variable-frequency oscillator.	2C2722–6
T106	OSCILLATOR SUBASSEMBLY: bfo; incl capacitors C1, 1600 μμf button silver mica (Collins part #912 0967 00), C2, 5 to 50 μμf var air, C3, 50 μμf ±1 μμf temp coef —1200 ±15% (Collins part #913 0065 00), C4, 50 μμf (selected item) ceramic compensating capacitor, C5, 100 μμf ±10% ceramic or silver resistor R1 JAN type RC20BF104M, coil: 81 turns #9–41 Litz tapped at 31 turns, powdered iron core, phenolic tubular form; encl in aluminum can; 480 to 520 kc freq range; 2" lg x 1$\frac{7}{16}$" wd x 4⅜" h o/a; two #4–40 NC–2 x $\frac{5}{16}$" mtg studs on $\frac{13}{16}$" ctr; two #6–32 NC–2 spade bolts on 1$\frac{5}{16}$" ctr.	Beat-frequency oscillator.	2C2798–17
H101	POINTER, indicator: sliding.	Indicator on MEGACYCLE drum.	2Z7258.94
	POST, spacing: cad pl steel; ⅜" lg x $\frac{3}{16}$" OD; .130" ID for mtg.	Band switch spacer.	2Z7259–119
	PULLEY: CRS, tin pl; circular; 2.125" dia x ¼" thk; .375" dia hole.	Dial drive pulley, large.	6Z7678–2
	PULLEY: dial drive; CRS, tin pl; circular; ⅝" dia x .193" thk; .127" dia hole.	Dial drive pulley, small.	6Z7678–3
L122	REACTOR: 3.0 hy, 120 ma; 100 ohms DC resistance; 2500 v RMS test; HS metal case; 2$\frac{1}{16}$" wd x 2$\frac{7}{32}$" lg x 3$\frac{9}{32}$" h; four #6–32 NC–2 mtg inserts on 1¼" x 1⅜" ctr; 2 solder lug terms on $\frac{5}{16}$" ctr.	Power supply input d-c filter choke.	3C547–37
L123	REACTOR: 5 hy, 80 ma; 300 ohms DC resistance; 2500 v RMS test; HS metal case; 1$\frac{25}{32}$" wd x 1⅞" lg x 2$\frac{25}{32}$" h; four #6–32 NC–2 mtg inserts on $\frac{15}{16}$" x 1$\frac{1}{16}$" ctr; 2 solder lug term on $\frac{5}{16}$" ctr.	Power supply output d-c filter choke.	3C547–38
	RECEIVER SUBASSEMBLY: 1$\frac{3}{32}$" lg x .812" dia o/a; .092" dia shaft for mtg.	Vernier drive assembly.	2C4180–388–1
Z110	RECEIVER SUBASSEMBLY: incl coil L104 and capacitors C107 and C108; 1⅜" lg x 1" wd x 2" h o/a; two .140" dia mtg holes diagonally located on 1⅛" x ¾" ctr.	Tuning steps 4 through 7 (antenna).	2C4180–388–4
Z104	RECEIVER SUBASSEMBLY: incl capacitors C122 and C123 and coil L108; 1⅜" lg x 1" wd x 2" h o/a; two .140" dia mtg holes on opposite corners of 1⅛" x ¾" mtg ctr.	R-f tuning steps 8 through 15.	2C4180–388–6
Z105	RECEIVER SUBASSEMBLY: incl coil L112, C129 and C130; 1⅜" lg x 1" wd x 2" h o/a; two .14" dia mtg holes on opposite corners of board; 1⅛" x 1¾" mtg ctr.	R-f tuning steps 8 through 15.	2C4180–388–6
Z102	RECEIVER SUBASSEMBLY: incl coil L109 and capacitor C124; 1⅜" lg x 1" wd x 2" h o/a; two .140" dia mtg holes on opposite corners of 1⅛" x ¾" mtg ctr.	R-f tuning steps 16 through 30.	2C4180–388–7

Ref symbol	Name of part and description	Function of part	Signal Corps stock No.
Z103	RECEIVER SUBASSEMBLY: incl coil L113 and capacitor C132; 1⅜" lg x 1" wd x 2" h o/a; two .14" dia mtg holes on opposite corners of board; 1⅛" x 1¾" mtg ctr.	R-f tuning steps 16 through 30.	2C4180–388–7
Z106	RECEIVER SUBASSEMBLY: incl coil L107 and capacitors C120 and C121; 1⅜" lg x 1" wd x 2" h o/a; two .140" dia mtg holes on opposite corners of 1⅛" x ¾" mtg ctr.	R-f tuning steps 4 through 7.	2C4180–388–3
Z107	RECEIVER SUBASSEMBLY: incl coil L111, C127 and C128; 1⅜" lg x 1" wd x 2" h o/a; two .14" dia mtg holes on opposite corners of board; 1⅛" x 1¾" mtg ctr.	R-f tuning steps 4 through 7.	2C4180–388–3
Z115	RECEIVER SUBASSEMBLY: incl coils L101, L102, L103, fixed capacitors C101, C103, C105, and var capacitors C102, C104, C106 mtd on board; 2⅝" lg x 2" wd x 2½" h o/a; four .140" mtg holes on .875" x 1.750" ctr.	Tuning steps 1 through 3 (antenna).	2C4180–388–2
Z109	RECEIVER SUBASSEMBLY: incl coil L105, C109, and C110 mtd on board; 1⅜" lg x 1" wd x 2" h o/a; two .140" dia mtg holes diagonally located on 1⅛" x ¾" ctr.	Tuning steps 8 through 15 (antenna).	2C4180–388–5
CR101	RECTIFIER, metallic: selenium; input 12.5 v AC, 1 to 5000 cyc, single ph; output 6.28 v DC, 64 ma max, full wave.	Meter M101 rectifier.	3H4955
K101	RELAY, armature: right 1C, left 1C cont arrangement (viewed from mtg end); 3 amp, 150 w cont rating; palladium cont; single wnd coil, 12 v DC, .016 amp DC max release, .021 amp DC max oper, 375 ohms DC resistance, ins; solder lug term; 1$\frac{31}{64}$" lg x 1$\frac{1}{32}$" wd x 1$\frac{5}{16}$" h max; two #4–40 holes on diagonally .437" vert between ctr; fast acting.	Disabling relay.	2Z7599A–328
R143	RESISTOR, fixed: comp; 10 ohms ±10%; ½ w; JAN type RC20BF100K.	V112 filament voltage dropping.	3RC20BF100K
R170	RESISTOR, fixed: comp; 100 ohms ±10%; ½ w; JAN type RC20BF101K.	INPUT meter circuit load resistor.	3RC20BF101K
R163	RESISTOR, fixed: comp; 160 ohms ±5%; ½ w; JAN type RC20BF161J.	INPUT meter balancing resistor.	3RC20BF161J
R107, R111, R127	RESISTOR, fixed: comp; 470 ohms ±10%; ½ w; JAN type RC20BF471K.	R107: V102 cathode bias. R111: V103 cathode bias. R127: V106 cathode bias.	3RC20BF471K
R149	RESISTOR, fixed: comp; 820 ohms ±10%; ½ w; JAN type RC20BF821K.	Determines minimum bias.	3RC20BF821K
R179, R182	RESISTOR, fixed: comp; 1000 ohms ±10%; ½ w; JAN type RC20BF102K.	R179: I-f output V111 bias resistor. R182: CR101 load resistor.	3RC20BF102K
R174	RESISTOR, fixed: comp; 1000 ohms ±10%; 2 w; JAN type RC42BF102K.	B+ isolation.	3RC42BF102K
R110, R116, R124, R129, R135, R138, R162, R168, R173, R180	RESISTOR, fixed: comp; 2200 ohms ±10%; ½ w; JAN type RC20BF222K.	R110: V102 plate decoupling. R116: V105 tuning steps 2 to 12 plate load. R124: V102 plate decoupling. R129: V106 plate decoupling. R135: V107 plate decoupling. R138: V108 plate decoupling. R162: V114 bfo decoupling. R168: V111 avc amplifier bias.	3RC20BF222K

Ref symbol	Name of part and description	Function of part	Signal Corps stock No.
		R173: AUDIO meter voltage dropping resistor. R180: V111 i-f output plate voltage dropping.	
R142	RESISTOR, fixed: comp; 2200 ohms ±10%; 1 w; JAN type RC30BF222K.	V109 plate decoupling.	3RC30BF222K
R155	RESISTOR, fixed: comp; 3300 ohms ±10%; ½ w; JAN type RC20BF332K.	A-f voltage amplifier cathode bias.	3RC20BF332K
R181	RESISTOR, fixed: WW; JAN type RW32F402.	Current limiting resistor.	3RW27929
R119, R132	RESISTOR, fixed: comp; 4700 ohms ±10%; ½ w; JAN type RC20BF472K.	R119: 100-kc oscillator cathode bias. R132: Crystal filter selectivity.	3RC20BF472K
R106	RESISTOR, fixed: comp; 6800 ohms ±10%; ½ w; JAN type RC20BF682K.	V101 plate decoupling.	3RC20BF682K
R105, R122, R133, R136, R139	RESISTOR, fixed: comp; 10,000 ohms ±10%; ½ w; JAN type RC20BF103K.	R105: V101 tuning step 1 plate load resistor. R122: 100-kc oscillator decoupling. R133: V107 avc decoupling. R136: V108 avc decoupling. R139: V109 avc decoupling.	3RC20BF103K
R131	RESISTOR, fixed: comp; 22,000 ohms ±10%; ½ w; JAN type RC20BF223K.	Xtal filter selectivity.	3RC20BF223K
R126	RESISTOR, fixed: comp; 27,000 ohms ±10%; ½ w; JAN type RC20BF273K.	R126: V107 screen bleeder.	3RC20BF273K
R147, R169	RESISTOR, fixed: comp; 27,000 ohms ±5%; ½ w; JAN type RC20BF273J.	R147: Bias bleeder. R169: V108 screen bleeder.	3RC20BF273J
R104, R113, R114, R128, R151, R161	RESISTOR, fixed: comp; 33,000 ohms ±10%; ½ w; JAN type RC20BF333K.	R104: V101 screen voltage dropping. R113: V103 screen voltage dropping. R114: V105 screen voltage dropping. R128: V106 screen voltage dropping. R151: Diode load. R161: V114 bfo plate load.	3RC20BF333K
R109, R117, R134, R137, R141, R146	RESISTOR, fixed: comp; 47,000 ohms ±10%; ½ w; JAN type RC20BF473K.	R109: V102 screen voltage dropping. R117: V105 tuning steps 14–30 plate voltage dropping. R134: V107 screen voltage dropping. R137: V108 screen voltage dropping. R141: V109 screen voltage dropping. R146: V111 plate load (avc).	3RC20BF473K
R150	RESISTOR, fixed: comp; 68,000 ohms ±10%; ½ w; JAN type RC20BF683K.	Diode load.	3RC20BF683K
R102, R112, R115, R120, R123, R130, R145, R157,	RESISTOR, fixed: comp; 100,000 ohms ±10%; ½ w; JAN type RC20BF104K.	R102: V101 avc decoupling. R112: V103 injection grid. R115: V105 grid leak. R120: 100-kc oscillator screen voltage dropping. R123: V106 grid. R130: Crystal filter selectivity.	3RC20BF104K

Ref symbol	Name of part and description	Function of part	Signal Corps stock No.
R160, R167, R178		R145: Avc rectifier load (V110). R157: V113 grid. R160: V114 bfo screen voltage dropping. R167: V111 avc degenerative feedback. R178: Part of detector load supplying i-f output tube V111 input voltage.	
R171	RESISTOR, fixed: comp; 120,000 ohms ±10%; ½ w; JAN type RC20BF124K.	V111 avc filter.	3RC20BF124K
R121, R156, R158, R159, R177	RESISTOR, fixed: comp; 220,000 ohms ±10%; ½ w; JAN type RC20BF224K.	R121: 100-kc oscillator plate load. R156: A-f voltage amplifier V112 plate load. R158: T103 primary damping. R159: T103 secondary damping. R177: Part of detector load supplying i-f output tube V111 input voltage.	3RC20BF224K
R108	RESISTOR, fixed: comp; 330,000 ohms ±10%; ½ w; JAN type RC20BF334K.	V102 injection grid.	3RC20BF334K
R125, R144, R152, R153, R172	RESISTOR, fixed: comp; 470,000 ohms +10%; ½ w; JAN type RC20BF474K.	R125: V107 grid. R144: Avc filter. R152: Noise limiter filter. R153: Noise limiter load. R172: Static drain.	3RC20BF474K
R118	RESISTOR, fixed: comp; 680,000 ohms ±10%; ½ w; JAN type RC20BF684K.	100-kc oscillator grid.	3RC20BF684K
R101	RESISTOR, fixed: comp; 1 meg ±10%; ½ w; JAN type RC20BF105K.	V101 grid.	3RC20BF105K
R164, R166	RESISTOR, fixed: WW; 120 ohms ±5%; 8 w; JAN type RW30G121.	Part of bias voltage divider.	3RW18921
R165	RESISTOR, fixed: WW; 310 ohms ±5%; 8 w; JAN type RW30G311.	Part of bias voltage divider.	3RW21327
R140	RESISTOR, variable: comp; 100 ohms ±10%; 2 w; JAN type RV4ANSD101A.	METER ZERO control.	3RV21012
R148	RESISTOR, variable: comp; 10,000 ohms ±10%; 2 w; JAN type RV4ANFK103A.	RF GAIN control.	3RV41510
R154	RESISTOR, variable: comp; 500,000 ohms ±10%; 2 w; JAN type RV4ANFK504C.	AUDIO GAIN control.	3RV55048
	SCREWDRIVER: 90 deg offset; Phillips L shape; 1 end 3¼" lg other end 1" lg, 3¼" lg o/a; .188" dia round shank; #1 Phillips head both ends; Vaco type O1V.	Screw driver (Phillips head).	6R15490.1
O133	SHAFT: extension; 1.375" lg x .250" dia.	Crystal filter shaft extension.	2Z8204–162
O137	SHAFT: extension; steel, cad pl; round 4¾" lg x ¼" dia; mts in coupling; opposite sides flatted 4⅛", .015" x 45 deg chamfer both ends.	Shaft for switches S109 and S110.	2Z8203–598
O138	SHAFT: extension; 7.875" lg x .249" dia.	Bfo pitch adjustment.	2Z8202–68
O132	SHAFT: 3¾" lg x .375" dia o/a, .310" wd at flatted portion.	Crystal switch shaft.	2Z8204–161
O131	SHAFT: 10" lg x .375" dia o/a, .310" wd at flatted portion.	R-f switch shaft.	2Z8204–160
E117	SHIELD, tube: bayonet mtg; ⅛" ID x 2¼" lg inside.	Tube shield for V113.	2Z8304–237

Ref symbol	Name of part and description	Function of part	Signal Corps stock No.
E107, E108	SHIELD, tube: steel, cad pl; cylindrical, open top; bayonet mtg; .810" ID x 1⅜" lg inside; JAN type TSFOT101.	E107: Tube shield for V101. E108: Tube shield for V102.	2Z8304.57
E109, E110, E111, E112, E113, E114, E115, E116, E001, E002	SHIELD, tube: steel, cad pl; cylindrical, open top; bayonet mtg; .810" ID x 1¾" lg inside; JAN type TSFOT102.	E109: Tube shield for V103. E110: Tube shield for V104. E111: Tube shield for V105. E112: Tube shield for V106. E113: Tube shield for V107. E114: Tube shield for V108. E115: Tube shield for V109. E116: Tube shield for V114. E001: Tube shield for V001. E002: Tube shield for V002.	2Z8304.154
E104, E105, E106	SHIELD, tube: cad pl; cylindrical; bayonet mtg; .950" ID x 1$\frac{1}{16}$" lg inside; JAN type TSFOT105.	E104: Tube shield for V110. E105: Tube shield for V111. E106: Tube shield for V112.	2Z8304.183
XY111	SOCKET: crystal.	Socket for crystal Y111.	2Z8761–64
XV101, XV102, XV103, XV104, XV105, XV106, XV107, XV108, XV109, XV113, XV114	SOCKET, tube: 7 cont miniature; 1 piece saddle mtg; JAN type TSE7T101.	XV101: Socket for V100. XV102: Socket for V102. XV103: Socket for V103. XV104: Socket for V104. XV105: Socket for V105. XV106: Socket for V106. XV107: Socket for V107. XV108: Socket for V108. XV109: Socket for V109. XV113: Socket for V113. XV114: Socket for V114.	2Z8677.94
XV115	SOCKET, tube: octal; 1 piece under chassis saddle mtg; JAN type TSB8T101.	Socket for V115.	2Z8678.326
XV110, XV111, XV112	SOCKET, tube: 9 cont noval; 1 piece saddle mtg; JAN type TSE9T101.	XV110: Socket for V110. XV111: Socket for V111. XV112: Socket for V112.	2Z8679.30
XY101	SOCKET ASSEMBLY, crystal: for 10 crystals.	Sockets for crystals Y101 thru Y110.	2Z8636–23
O101B	SPIDER, coupling: phosphor bronze; cylindrical; 1.090" dia x .157" thk; .250" dia ctr mtg hole.	Part of main oscillator coupling.	2Z3295–167
	SPRING: helical extension type; .029" dia spring wire, type 302 SS; .574" lg x .125" OD o/a; 13¾ turns; 90 deg hook term 1 ea end.	Gear loading spring (part of main gear assembly).	2Z8877.615
	SPRING: helical compression; .025" dia spring wire, #302 SS; 3½" lg x .312" OD o/a; 33 turns.	Variable i-f rack spring.	2Z8877.332
	SPRING: helical extension type; 1.262" lg x .312" OD; 39 turns.	R-f slug rack spring.	2Z8877.333
	SPRING: helical extension type; ⅜" free lg x .130" dia o/a; 6 turns.	R-f slug rack gear loading.	2Z8877.334
	SPRING: helical extension type; $\frac{13}{32}$" lg x $\frac{5}{32}$" dia o/a; 7 turns closely wnd.	Dial spring loading.	2Z8877.335
	SPRING: torsion type; 1" lg x .874" OD; 13¼ turns closely wnd.	MEGACYCLES drum dial tension.	2Z8877.336
	SPRING: loop type; SS wire type 302, .030" dia; .229" lg x .225" wd x .030" thk.	Part of slug table assembly of r-f tuner assembly.	2Z8877.614
S110, S111	SWITCH SECTION, rotary: 12 position (p/o rotary switch); 1 pole, 2 throw.	Variable i-f selecting.	3Z9903E–10.14
S108	SWITCH SECTION, rotary: 18 position (p/o rotary switch); 2 pole, 15 throw.	Crystal oscillator harmonic selecting.	3Z9903E–10.13
S101, S102,	SWITCH SECTION, rotary: 18 position (p/o rotary switch); 1 pole, 17 throw.	S101: Antenna coil selecting. S102: Antenna coil selecting.	3Z9903E–10.15

Ref symbol	Name of part and description	Function of part	Signal Corps stock No.
S106, S107, S109		S106: First mixer plate coil selecting. S107: First mixer plate circuit selecting. S109: Crystal selecting.	
S103, S105, S104	SWITCH SECTION, rotary: 18 position (p/o rotary switch); 1 pole, 18 position.	S103: R-f coil selecting. S105: Mixer grid circuit selecting. S104: R-f amplifier plate coil selecting.	3Z9903E–10.12
S112, S115, S116, S118	SWITCH, rotary: DPDT.	S112: BFO ON-OFF. S115: AVC ON-OFF. S116: Noise LIMITER ON-OFF. S118: CALIBRATE ON-OFF.	3Z9825–50.2
S113	SWITCH, rotary: 2 pole, 3 position; 1 sect.	Receiver ON-STANDBY-OFF.	3Z9825–58.198
S114	SWITCH, rotary: 1 pole, 5 position; 1 sect.	SELECTIVITY switch.	3Z9825–50.1
S117	SWITCH, toggle: DPDT; JAN type ST52R.	METER switch.	3Z9863–52R
	TOOL, alinement: natural phenolic, LTS–M3; 6¾" lg x ½" dia o/a; ⅜" lg scdr tip tapered to $\frac{1}{32}$" at tip; phenolic grip.	Alinement tool.	6Q335–2
	TOOL, alinement: natural phenolic, LTS–M3; 5$\frac{13}{16}$" lg x .315" dia o/a; 1½" lg scdr tip tapered to $\frac{1}{32}$" at tip w/$\frac{1}{16}$" d x $\frac{5}{32}$" wd notch in tip; opposite end has flat insert $\frac{5}{16}$" lg w/$\frac{1}{16}$" d x $\frac{5}{32}$" wd notch in end.	Alinement tool.	6Q335–1
T107	TRANSFORMER, AF: line type; pri 5000 ohms impedance, 1500 v test; secd 600 ohms impedance, 1500 v test, tapped at 4 ohms; HS metal case, iron core; 1⅞" lg x 1¾" wd x 3" h; 3 w oper level; turns ratio 2.89:1; freq response; 100 cps ±3 db, 300 cps ±1 db, 1000 cps zero reference, 2500 cps ±1 db, 5000 cps ±3 db; solder lug term; four #6–32 x ⅜" h studs on 1$\frac{5}{16}$" x 1$\frac{1}{16}$" ctr.	Audio output transformer.	2Z9637.138
T101	TRANSFORMER, IF: 490 to 510 kc; shielded; 1$\frac{7}{16}$" lg x 1$\frac{7}{16}$" wd x 2⅝" h less term and mtg; tuned pri and secd; adj iron core tuning; solder lug term on bottom.	Crystal filter input.	2Z9629–390
T103, T104, T105	TRANSFORMER, IF: 500 kc; shielded; 2" lg x 1$\frac{7}{16}$" d x 3½" h o/a; tuned pri and secd; adj powdered iron core tuning.	T103: First i-f transformer. T104: Second i-f transformer. T105: Third i-f transformer.	2Z9641.328
T108	TRANSFORMER, power: fil and plate; input 115 v 60 cyc, single ph; secd #1, 5 v, 2 amp; secd #2, 6.3 v, 5 amp; secd #3, 700 v CT, .090 amp; HS metal case; 3$\frac{13}{16}$" lg x 3$\frac{5}{16}$" d x 2¾" excluding term; solder lug ceramic bushing term.	Power transformer.	2Z9613.719
V101, V105	TUBE, electron: JAN type 6AK5.	V101: R-f amplifier. V105: Crystal oscillators.	2J6AK5
V102, V103, V106	TUBE, electron: JAN type 6BE6.	V102: First mixer. V103: Third mixer. V106: Second mixer.	2J6BE6
V001, V002, V104, V107, V108, V109, V114	TUBE, electron: JAN type 6BA6.	V001: Vfo. V002: Vfo. V104: Crystal oscillator. V107: First i-f. V108: Second i-f. V109: Third i-f. V114: Bfo.	2J6BA6

Ref symbol	Name of part and description	Function of part	Signal Corps stock No.
V110, V112	TUBE, electron: JAN type 12AX7.	V110: Detector and avc rectifier. V112: Noise limiter, first audio.	2J12AX7
V111	TUBE, electron: JAN type 12AU7.	Avc amplifier.	2J12AU7
V113	TUBE, electron: JAN type 6AQ5.	Audio output.	2J6AQ5
V115	TUBE, electron: JAN type 5V4G.	Power supply rectifier.	2J5V4G
	WRENCH: Bristo set screw.	For No. 4 Bristo set screw.	6RK55232
	WRENCH: Bristo set screw.	For No. 6 Bristo set screw.	6R55230
	WRENCH: Bristo set screw.	For No. 8 Bristo set screw.	6R55231.1
	WRENCH: Bristo set screw.	For No. 10 Bristo set screw.	6R55230-10
V116	TUBE, electron: JAN type OA2.	Voltage regulator.	2JOA2

CAPACITOR COLOR CODES

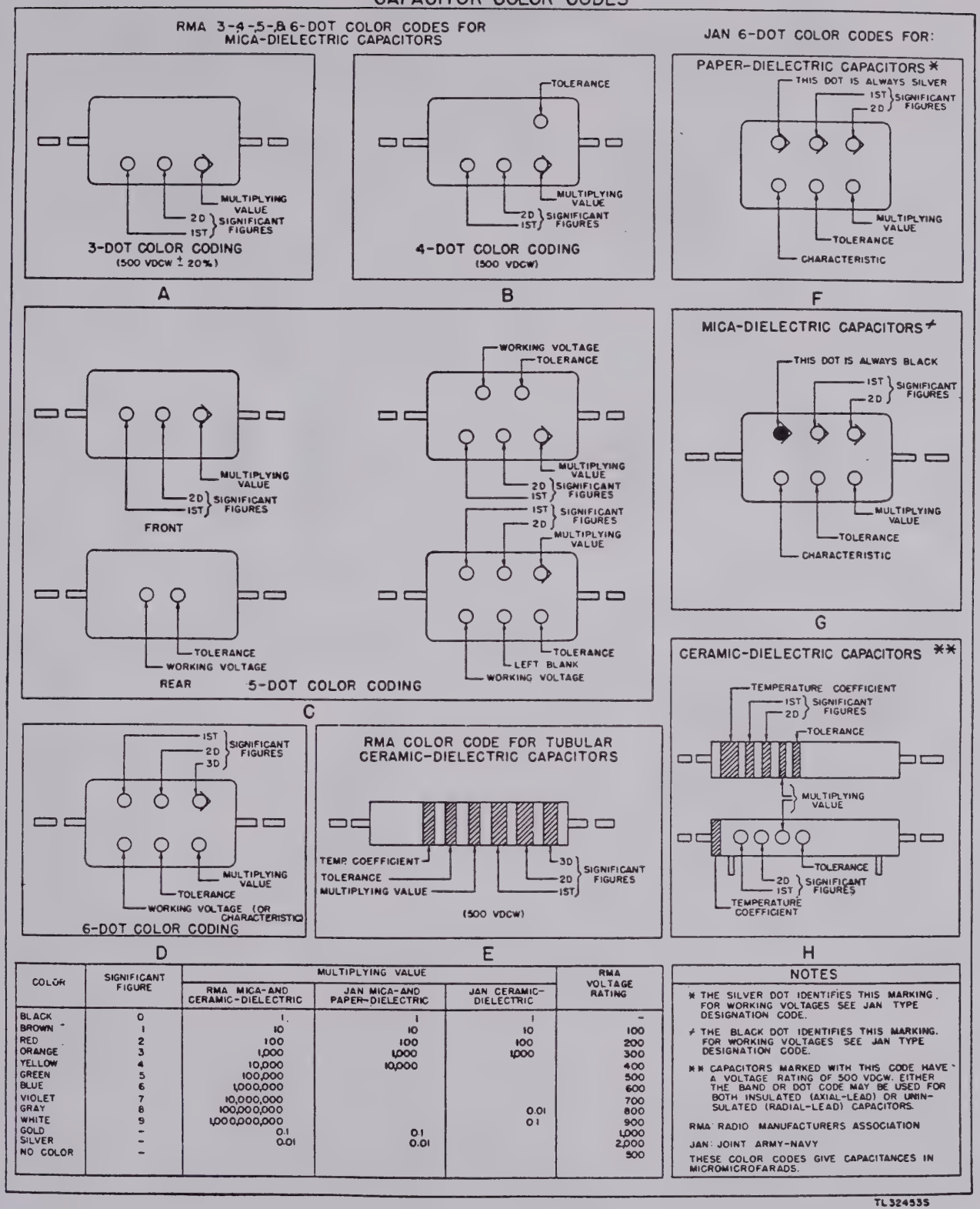

COLOR	SIGNIFICANT FIGURE	MULTIPLYING VALUE			RMA VOLTAGE RATING
		RMA MICA-AND CERAMIC-DIELECTRIC	JAN MICA-AND PAPER-DIELECTRIC	JAN CERAMIC-DIELECTRIC	
BLACK	0	1	1	1	-
BROWN	1	10	10	10	100
RED	2	100	100	100	200
ORANGE	3	1,000	1,000	1,000	300
YELLOW	4	10,000	10,000		400
GREEN	5	100,000			500
BLUE	6	1,000,000			600
VIOLET	7	10,000,000			700
GRAY	8	100,000,000		0.01	800
WHITE	9	1,000,000,000		0.1	900
GOLD	-	0.1	0.1		1,000
SILVER	-	0.01	0.01		2,000
NO COLOR	-				500

NOTES

* THE SILVER DOT IDENTIFIES THIS MARKING. FOR WORKING VOLTAGES SEE JAN TYPE DESIGNATION CODE.

≠ THE BLACK DOT IDENTIFIES THIS MARKING. FOR WORKING VOLTAGES SEE JAN TYPE DESIGNATION CODE.

** CAPACITORS MARKED WITH THIS CODE HAVE A VOLTAGE RATING OF 500 VDCW. EITHER THE BAND OR DOT CODE MAY BE USED FOR BOTH INSULATED (AXIAL-LEAD) OR UNINSULATED (RADIAL-LEAD) CAPACITORS.

RMA: RADIO MANUFACTURERS ASSOCIATION

JAN: JOINT ARMY-NAVY

THESE COLOR CODES GIVE CAPACITANCES IN MICROMICROFARADS.

TL 32453S

Figure 41. Capacitor color codes.

RESISTOR COLOR CODES

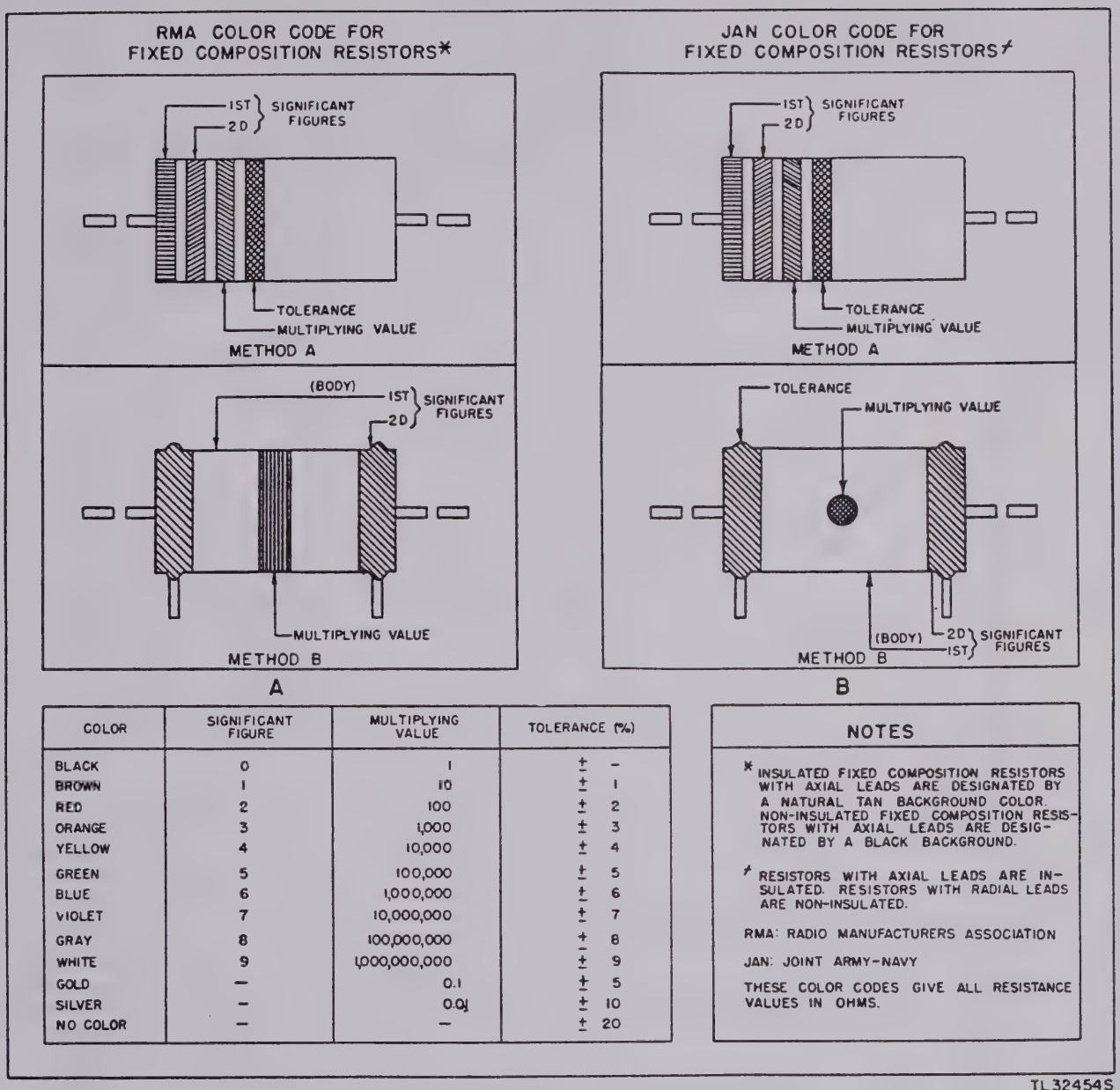

COLOR	SIGNIFICANT FIGURE	MULTIPLYING VALUE	TOLERANCE (%)
BLACK	0	1	± –
BROWN	1	10	± 1
RED	2	100	± 2
ORANGE	3	1,000	± 3
YELLOW	4	10,000	± 4
GREEN	5	100,000	± 5
BLUE	6	1,000,000	± 6
VIOLET	7	10,000,000	± 7
GRAY	8	100,000,000	± 8
WHITE	9	1,000,000,000	± 9
GOLD	–	0.1	± 5
SILVER	–	0.01	± 10
NO COLOR	–	–	± 20

NOTES

* INSULATED FIXED COMPOSITION RESISTORS WITH AXIAL LEADS ARE DESIGNATED BY A NATURAL TAN BACKGROUND COLOR. NON-INSULATED FIXED COMPOSITION RESISTORS WITH AXIAL LEADS ARE DESIGNATED BY A BLACK BACKGROUND.

/ RESISTORS WITH AXIAL LEADS ARE INSULATED. RESISTORS WITH RADIAL LEADS ARE NON-INSULATED.

RMA: RADIO MANUFACTURERS ASSOCIATION

JAN: JOINT ARMY-NAVY

THESE COLOR CODES GIVE ALL RESISTANCE VALUES IN OHMS.

TL32454S

Figure 40. Resistor color codes.

INDEX

	Paragraphs	Page
Accuracy:		
Tuning	3, 4	1
Calibration	4	1
Additional equipment required	8	6
Adjustment:		
Beat-frequency oscillator	85	72
Calibration oscillator	17	15
Controls	14	12
Crystal oscillator trimmer	82	72
Meter zeroing	18	15
Alinement:		
Dial	86	72
General	80	71
Inductor L124	94	74
Intermediate amplifiers and crystal filter	84	72
Tuning step 2 and variable i-f (for even-numbered steps)	87	73
Tuning step 3 and variable i-f (for odd-numbered steps)	88	73
Tuning steps 4 through 7	89	73
Tuning steps 8 through 15	90	73
Tuning steps 16 through 30	91	74
R-f alinement, tuning step 1	92	74
Test equipment	62	54
Variable-frequency oscillator	93	74
Amplifiers:		
Audio	50	41
Intermediate frequency	46	36
Radio frequency	38	24
Antenna	4–8	1
Audio-frequency tests	69	65
Automatic-volume control	49	39
Avc characteristics	101	75
Band change mechanism	58	49
Band change gearing, repair	76	67
Band switching	55	45
Beat-frequency oscillator:		
Adjustment	85	72
Testing	97	75
Theory	51	41
Block diagrams:		
Complete	37	23
Receiver in use	3	1
Receiver in use with dual diversity equipment	3	1
Tuning steps, block diagrams	37	23
Calibrating receiver	17	15
Calibration oscillator:		
Adjustment	17	15
Theory	52	43
Checking filament and B+ circuits for shorts	64	54
Cleaning:		
Chassis assembly	28	17
Removed parts	63	54

	Paragraphs	Page
Oscillator, beat-frequency	51	41
Oscillator, calibration	52	43
Oscillator, crystal	43	32
Oscillator, variable-frequency	44	34
Packaging data	5	4
Painting	32	19
Power supply	53	44
Radio-frequency amplifier	38	24
Radio-frequency tests	72	66
Refinishing	79	70
Removal of vfo	75	67
Replacement:		
Dial cables	78	70
Parts, general	74	67
Rustproofing	32	19
Selectivity, test	100	75
Sensitivity, test	98	75
Shipment	104	76
Signal-plus-noise to noise ratio, test	99	75
Signal substitution notes	68	65
Siting	9	7
Special tools	26	17
Stage gain charts	73	66
Starting procedure	15	14
Stopping	19	15
Technical characteristics	4	1
Tests:		
Final, general	95	74
Audio-frequency	69	65
Fixed i-f	70	66
Variable i-f	71	66
Test equipment for alinement and adjustment	81	71
Test equipment for final tests	62–96	54
Test equipment for trouble shooting	62	54
Tools:		
Supplied	25	17
Special	26	17
Trouble shooting:		
Field depot	64–77	54
Organizational	33–35	19
Tubes, location of	11	10
Tuning mechanism	57	49
Tuning and band-change gearing repairs	76, 77	67, 69
Uncrating	10	7
Visual inspection	34	19
Weatherproofing	31	19
Zeroing meter	18	15

☆ U.S. GOVERNMENT PRINTING OFFICE: 1962 O—636874

p. 2, 4, 13, 24, 25

p. 2, 4, 12, 14, 15

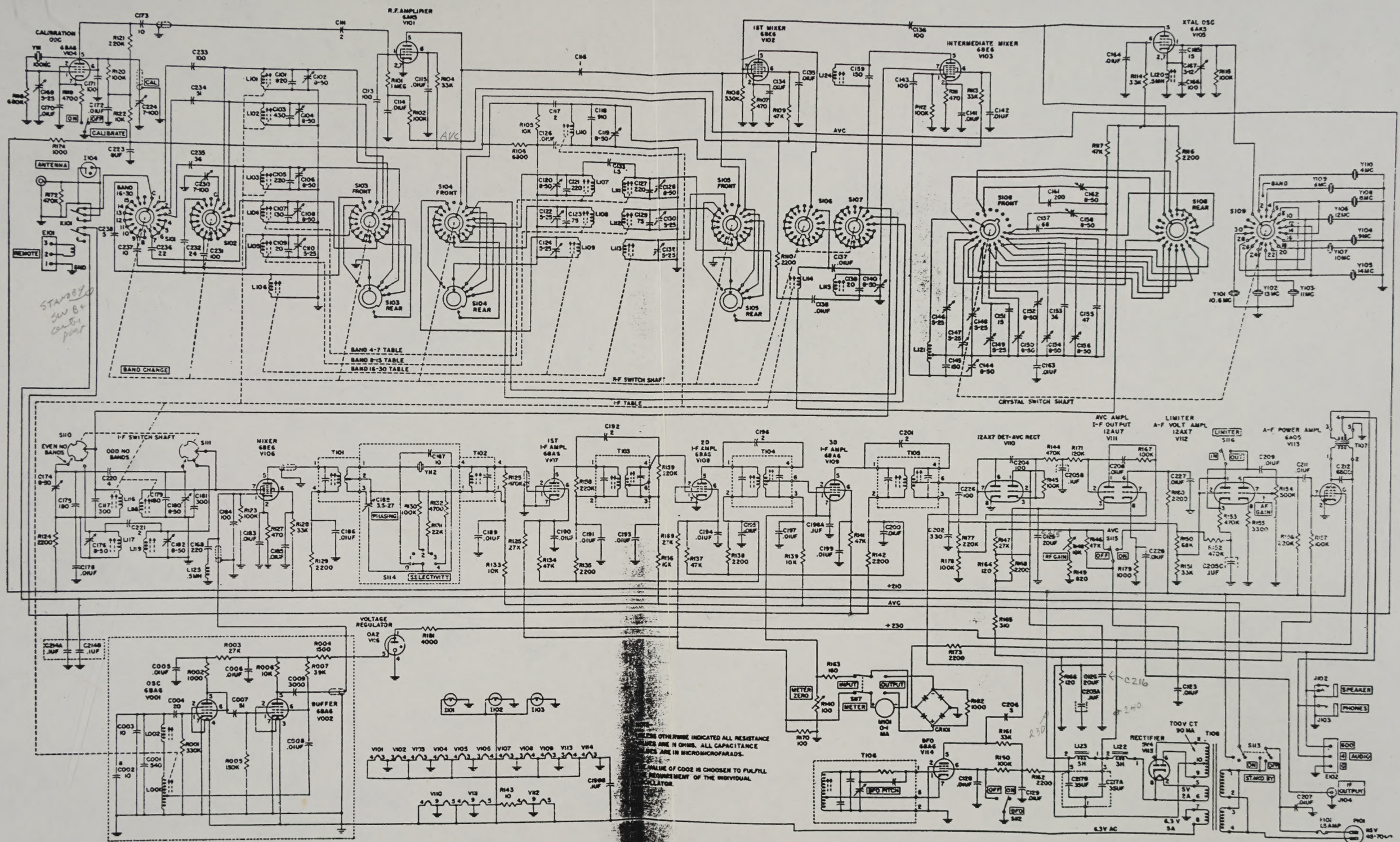

Figure 42. Radio receiver R-388/URR, over-all schematic.

C215 - V111 cathode bypass
C216 - V113 BIAS FILTER

W7FG Vintage Manuals
3300 Wayside Drive
Bartlesville, Oklahoma 74006
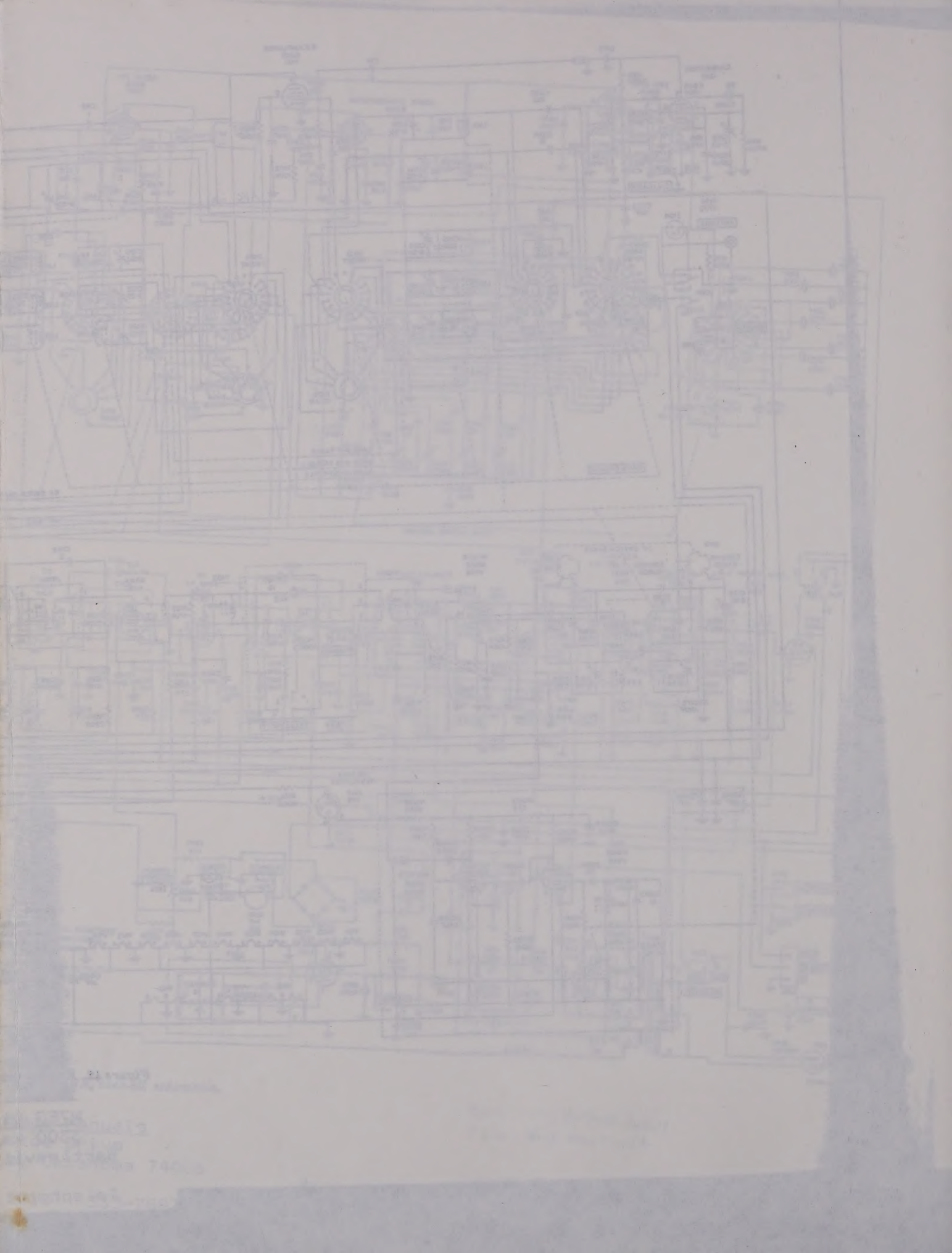
Telephone: (918) 333-7893